Amtrak Passenger Train 501 Derailment
DuPont, Washington
December 18, 2017

Accident Report

NTSB/RAR-19/01
PB2019-100807

National
Transportation
Safety Board

NTSB/RAR-19/01
PB2019-100807
Notation 58913
Report Date: May 21, 2019

Railroad Accident Report

Amtrak Passenger Train 501 Derailment
DuPont, Washington
December 18, 2017

National
Transportation
Safety Board

490 L'Enfant Plaza, S.W.
Washington, D.C. 20594

National Transportation Safety Board. 2019. *Amtrak Passenger Train 501 Derailment, DuPont, Washington, December 18, 2017.* NTSB/RAR-19/01. Washington, DC.

Abstract: On December 18, 2017, at 7:34 a.m. Pacific standard time, southbound Amtrak (National Railroad Passenger Corporation) passenger train 501, consisting of 10 passenger railcars, a power railcar, a baggage railcar, and a locomotive at either end, derailed from a bridge near DuPont, Washington. When the train derailed, it was on its first revenue service run on a single main track (Lakewood Subdivision) at milepost 19.86. There was one run for special guests the week before the accident. Several passenger railcars fell onto Interstate 5 and hit multiple highway vehicles. At the time of the accident, 77 passengers, 5 Amtrak employees, and a Talgo, Inc., technician were on the train. Of these individuals, 3 passengers were killed, and 57 passengers and crewmembers were injured. Additionally, 8 individuals in highway vehicles were injured. The damage is estimated to be more than $25.8 million. The accident investigation focused on the following issues: individual agency responsibilities in preparation for inaugural service, multiagency participation in preparation for inaugural service, Amtrak safety on a host railroad, implementation of positive train control, training and qualifying operating crews, crashworthiness of the Talgo equipment, survival factors and emergency design of equipment, and multiagency emergency response. As a result of this investigation, the National Transportation Safety Board makes safety recommendations to the United States Secretary of Transportation, the Federal Railroad Administration, United States Department of Defense Fire and Emergency Services Working Group, the Washington State Department of Transportation, the Oregon Department of Transportation, National Railroad Passenger Corporation (Amtrak), and the Central Puget Sound Regional Transit Authority. The National Transportation Safety Board also reiterates four recommendations to the Federal Railroad Administration and reclassifies three recommendations to the Federal Railroad Administration.

The National Transportation Safety Board (NTSB) is an independent federal agency dedicated to promoting aviation, railroad, highway, marine, and pipeline safety. Established in 1967, the agency is mandated by Congress through the Independent Safety Board Act of 1974 to investigate transportation accidents, determine the probable causes of the accidents, issue safety recommendations, study transportation safety issues, and evaluate the safety effectiveness of government agencies involved in transportation. The NTSB makes public its actions and decisions through accident reports, safety studies, special investigation reports, safety recommendations, and statistical reviews.

The NTSB does not assign fault or blame for an accident or incident; rather, as specified by NTSB regulation, "accident/incident investigations are fact-finding proceedings with no formal issues and no adverse parties … and are not conducted for the purpose of determining the rights or liabilities of any person." 49 C.F.R. § 831.4. Assignment of fault or legal liability is not relevant to the NTSB's statutory mission to improve transportation safety by investigating accidents and incidents and issuing safety recommendations. In addition, statutory language prohibits the admission into evidence or use of any part of an NTSB report related to an accident in a civil action for damages resulting from a matter mentioned in the report. 49 U.S.C. § 1154(b).

For more detailed background information on this report, visit NTSB investigations website and search for NTSB accident ID RRD18MR001. Recent publications are available in their entirety on the Internet at NTSB website. Other information about available publications also may be obtained from the website or by contacting:

National Transportation Safety Board, Records Management Division, CIO-40, 490 L'Enfant Plaza, SW, Washington, DC 20594, (800) 877-6799 or (202) 314-6551

Copies of NTSB publications may be downloaded at no cost from the National Technical Information Service's Technical Report Library at https://ntrl.ntis.gov/NTRL/. To download this publication, use product number PB2019-100807. For additional assistance, contact:

National Technical Information Service, 5301 Shawnee Rd., Alexandria, VA 22312, (800) 553-6847 or (703) 605-6000 (see NTIS website)

Contents

Figures and Tables ..... **iv**

Acronyms and Abbreviations ..... **vii**

Executive Summary ..... **x**

1.Factual Information **1**
1.1 Accident 1
1.2 Accident Narrative 2
1.3 Amtrak Cascades Service 5
1.4 Washington State Department of Transportation 6
1.4.1 WSDOT Rail, Freight, and Ports Division 6
1.4.2 WSDOT Capital Improvements 7
1.4.3 The Point Defiance Bypass Project (Lakewood Subdivision) 7
1.5 Sound Transit 8
1.5.1 Office of System Safety and Quality Assurance 8
1.5.2 System Safety Program Plan 9
1.5.3 System Safety Certification Plan 9
1.5.4 Construction, Safety Certification for Point Defiance Bypass Project 9
1.5.5 Hazard Analysis 10
1.5.6 Inaugural Service Point Defiance Bypass Project 11
1.5.7 BNSF Railway 12
1.5.8 Amtrak 12
1.6 Operations 13
1.7 Oversight 13
1.7.1 Washington [State] Utilities and Transportation Commission 13
1.7.2 Federal Railroad Administration 14
1.8 Personnel Information 15
1.8.1 Fitness for Duty 15
1.8.2 Training and Experience 15
1.8.3 Territory Qualification for Lakewood Subdivision 16
1.8.4 Wayside Cues for Speed Restriction 18
1.8.5 Familiarity with the Siemens Charger Locomotive 19
1.8.6 Crew Responsibilities 20
1.9 Damages Estimates 20
1.10 Equipment Information 21
1.10.1 Lead Locomotive WDTX 1402 (1) 22
1.10.2 Passenger Equipment 22
1.10.3 Rear Locomotive AMTK 181 (14) 22
1.10.4 Predeparture Inspections 22
1.10.5 Locomotive Postaccident Inspections 23
1.11 Crashworthiness and Derailment Description 23
1.11.1 Talgo Railcar Design 23

1.11.2 Derailment Description ... 27
1.11.3 Locomotive Crashworthiness Requirements ... 34
1.11.4 Postaccident Observations and Inspections ... 34
1.11.5 United States Passenger Railcar Crashworthiness Standards ... 35
1.11.6 Talgo Crashworthiness Design ... 36
1.11.7 Test and Research ... 41
1.11.8 Vancouver Talgo Derailment ... 41
1.12 Survival Factors ... 42
1.12.1 Locomotive Survival Factors ... 42
1.12.2 Passenger Car Survival Factors ... 43
1.12.3 Postaccident Observations of Passenger Railcar Interiors ... 46
1.13 Injuries ... 46
1.13.1 Locomotive ... 46
1.13.2 Passenger Railcars ... 47
1.13.3 Highway Vehicles ... 47
1.13.4 Highway Vehicle Accident Sequence ... 47
1.13.5 Passenger Ejections ... 51
1.13.6 Occupant Space Design and Safety of Railcars ... 54
1.13.7 Handicap Accessibility ... 56
1.13.8 Interior Glass ... 59
1.13.9 Emergency Egress – Lighting and Signage ... 60
1.13.10 Emergency Doors ... 62
1.13.11 Emergency Windows ... 64
1.14 Emergency Response ... 65
1.14.1 Pierce County Emergency Management Agency ... 65
1.14.2 Fire/Rescue and EMS Response ... 66
1.14.3 Law Enforcement Response ... 67
1.14.4 Pierce County Incident Management Team ... 68
1.14.5 Fire Department Agencies ... 69
1.14.6 Law Enforcement Agencies ... 70
1.14.7 Training ... 70
1.14.8 Postaccident Action ... 71
1.15 Track and Structure ... 71
1.15.1 Inspections ... 72
1.15.2 Curve and Signage ... 72
1.16 Signal and Train Control ... 74
1.16.1 Positive Train Control ... 75

2.Analysis ... 76
2.1 Introduction ... 76
2.2 Inward-Facing Audio and Image Recorders ... 76
2.3 Positive Train Control ... 78
2.4 Human Performance ... 79
2.4.1 Qualification Trips on the Territory ... 80
2.4.2 Training on the Equipment ... 81
2.4.3 Developing Training Programs ... 82
2.4.4 Advance Warning Speed Reduction Signs ... 83

2.4.5 Qualifying Conductor Role and Responsibilities 85
2.5 Preparation for Inaugural Cascades Service on Bypass 86
2.5.1 Multiple Agency/Organization Coordination 86
2.5.2 Railroad System Safety Analysis 87
2.5.3 Sound Transit 88
2.5.4 Amtrak 90
2.5.5 Safety and Security Management Plan 90
2.5.6 Safety Certification Process (Sound Transit Internal Oversight) 92
2.5.7 External Oversight of Sound Transit 94
2.6 Equipment Crashworthiness 98
2.6.1 Historical and Regulatory Approach to Crashworthiness 101
2.6.2 Grandfathering 104
2.6.3 Investigative Hearing 105
2.6.4 Design Life of Talgo Series VI 107
2.6.5 WSDOT's Fleet Management Plan 107
2.6.6 Lead Locomotive 108
2.7 Survival Factors 109
2.7.1 Emergency Lighting 109
2.7.2 Exit Controls and Manual Release Mechanism Signage 110
2.7.3 Compartmentalization 111
2.7.4 Train Seat Design 111
2.7.5 Passenger Ejection and Injuries 114
2.7.6 Communications 118
2.7.7 Postaccident Activity 118

3.Conclusions 120
3.1 Findings 120
3.2 Probable Cause 124

4.Recommendations 125
4.1 New Recommendations 125
4.2 Reiterated Recommendations 128
4.3 Classified Recommendations 129

Board Member Statements 130

Appendixes 135
Appendix A. Investigation 135
Appendix B. DuPont Railroad of Record 136

References 137

Figures and Tables

Figure 1. Accident location and Point Defiance Bypass 1

Figure 2. Aerial photograph of accident. 5

Figure 3. Sound Transit hazard risk assessment chart. 11

Figure 4. Location of signage on the approach to MP 19.8. 18

Figure 5. Side view of the Talgo trainset. 23

Figure 6. Talgo passenger railcar. 24

Figure 7. Supported end of Talgo railcar. 24

Figure 8. Rolling assembly cutaway and its side view. 25

Figure 9. Articulated connections. The image on the right side is mirrored. 26

Figure 10. Overhead with railcar positions labeled. 27

Figure 11. Detached rolling assembly from AMTK 7454 (3). 28

Figure 12. Detached rolling assembly tower partially inside AMTK 7504(7). 29

Figure 13. AMTK 7421 (11) resting on AMTK 7424 (8). 30

Figure 14. Derailing path of travel of Amtrak 501. 31

Figure 15. WDTX 1402 (1) postderailment position. 32

Figure 16. Highway vehicle struck by lead locomotive. 33

Figure 17. Siemens Charger locomotive crashworthiness features. 34

Figure 18. Damage to WDTX 1402 (1). 35

Figure 19. Pictures of the cab design and cab damage. 42

Figure 20. Talgo coach class seating layout. 44

Figure 21. Talgo business class seating layout. 44

Figure 22. Coach class Americans with Disabilities Act (ADA) layout. 45

Figure 23. Business class Americans with Disabilities Act (ADA) layout. 45

Figure 24. Final resting position of F150 and Freightliner. 48

Figure 25. Detached rolling assembly and Grand Cherokee. 49

Figure 26. Green Kia and rolling assembly on I-5. 50

Figure 27. Damaged Jeep Grand Cherokee. 50

Figure 28. AMTK 7421 (11) resting on AMTK 7424 (8). 52

Figure 29. Open end of AMTK 7421 (11). 53

Figure 30. Coach class seating layout showing rotating and nonrotating seats. 54

Figure 31. Bridge railing penetrating AMTK 7423 and displaced passenger seats. 55

Figure 32. Child car seat near AMTK 7424 (8). 56

Figure 33. Exemplar wheelchair lift and damaged lift in AMTK 7554 (4). 57

Figure 34. Photograph of missing wheelchair lift and damage to AMTK 7504 (7). 57

Figure 35. Photograph of the interior lavatory damage of AMTK 7504 (7). 58

Figure 36. Jammed vestibule door, AMTK 7422 (10). 60

Figure 37. Exemplar emergency door showing instruction placard. 64

Figure 38. Interior emergency window removal instructions. 65

Figure 39. Interior emergency window removal instructions. 65

Figure 40. Two-mile advance warning speed sign at MP 17.8- 30 mph. 73

Figure 41. Speed restriction sign at entrance to curve MP 19.8 - 30 mph. 74

Figure 42. Railroad of record. 136

Table 1. Hazard associated with speed reductions for curves. 10

Table 2. Train 501 damage estimate. 21

Table 3. Train 501 equipment information. 21

Table 4. UIC-566 compared with Talgo end car design load cases. 37

Table 5. Postaccident observations of passenger railcar interiors. 46

Table 6. Breakdown of car occupant injuries. 47

Table 7. Highway vehicle injury breakdown. [Chart incomplete pending medical records.]..... 51

Table 8. Distribution of victims to medical facilities. 67

Table 9. Emergency response timeline. 68

Acronyms and Abbreviations

ADA	Americans with Disabilities Act
Amtrak	National Railroad Passenger Corporation
APTA	American Public Transportation Association
ARRA	American Recovery and Reinvestment Act
BLET	Brotherhood of Locomotive Engineers and Trainmen
BMI	body mass index
BNSF	BNSF Railway
CEM	crash energy management
CFR	*Code of Federal Regulations*
CIL	certifiable items list
CP	control point
CSX	CSX Transportation, Inc.
CTA	cognitive tasks analysis
CPAP	Continuous Positive Airway Pressure
CTC	centralized traffic control
DOD	US Department of Defense
DOT	US Department of Transportation
DPU	distributive power locomotive unit
ELD	Electronic Logging Device
EMA	Pierce County Emergency Management Agency
EO	Emergency Order
FAA	Federal Aviation Administration
FAST Act	Fixing America's Surface Transportation Act of 2015

FDA	US Food and Drug Administration
FMCSA	Federal Motor Carrier Safety Administration
FMP	fatigue management plan
FRA	Federal Railroad Administration
FTA	Federal Transit Administration
g	gravitational force
GCOR	General Code of Operating Rules
GTB	General Track Bulletins
HPPL	high performance photoluminescent
HSIPR	High-Speed Intercity Passenger Rail Program
I-5	US Interstate 5
IMT	Incident Management Team
JBLM	Joint Base Lewis-McChord
LSA	lead service attendant
GPS	global positioning system
MCI	mass casualty incident
MHz	megahertz
MP	milepost
NECR	New England Central Railroad
NS	Norfolk Southern Corporation
OJT	Amtrak's designated on-the-job trainer
ODOT	Oregon Department of Transportation
OSA	obstructive sleep apnea
PA	public address system
PHA	preliminary hazard analysis

PIH	poison inhalation hazard
PRIIA	Passenger Rail Investment and Improvement Act of 2008
PTC	Positive Train Control
RPO	U.S. Railway Post Office
RSAC	Rail Safety Advisory Committee
SA	Safety Advisory
SITP	Systems Integration Test Plan
SIR	*Special Investigation Report*
SOP	Standard Operating Procedure
SMART	International Association of Sheet Metal, Air, Rail, and Transportation Workers
Sound Transit	Central Puget Sound Regional Transit Authority
SSCP	System Safety Certification Plan
SSMP	Safety and Security Management Plan
SMS	Safety Management System
SQA	Safety and Quality Assurance Division
TSS	track safety standard
TY&E	Train, Yard & Engine
UIC	International Union of Railways
UP	Union Pacific Railroad
WSDOT	Washington Department of Transportation
WSP	Washington State Police

Executive Summary

On December 18, 2017, at 7:34 a.m. Pacific standard time, southbound Amtrak (National Railroad Passenger Corporation) passenger train 501, consisting of 10 passenger railcars, a power railcar, a baggage railcar, and a locomotive at either end, derailed from a bridge near DuPont, Washington.

When the train derailed, it was on its first revenue service run on a single main track (Lakewood Subdivision) at milepost 19.86. There was one run for special guests the week before the accident. Several passenger railcars fell onto Interstate 5 and hit multiple highway vehicles. At the time of the accident, 77 passengers, 5 Amtrak employees, and a Talgo, Inc., technician were on the train. Of these individuals, 3 passengers were killed, and 57 passengers and crewmembers were injured. Additionally, 8 individuals in highway vehicles were injured. The damage is estimated to be more than $25.8 million. At the time of the accident, the temperature was 48˚F, the wind was from the south at about 9 mph, and the visibility was 10 miles in a light rain.

The following are safety issues in this accident:

- Individual agency responsibilities in preparation for inaugural service
- Multiagency participation in preparation for inaugural service
- Amtrak safety on a host railroad
- Implementation of positive train control
- Training and qualifying operating crews
- Crashworthiness of the Talgo equipment
- Survival factors and emergency design of equipment
- Multiagency emergency response

Parties to the investigation include the Federal Railroad Administration; Washington Utilities and Transportation Commission; Amtrak; Central Puget Sound Regional Transit Authority; Washington State Department of Transportation; Talgo, Inc.; Siemens Industry, Inc.; the Brotherhood of Locomotive Engineers and Trainmen; and the International Association of Sheet Metal, Air, Rail and Transportation Workers.

The National Transportation Safety Board determines that the probable cause of the Amtrak 501 derailment was Central Puget Sound Regional Transit Authority's failure to provide an effective mitigation for the hazardous curve without positive train control in place, which allowed the Amtrak engineer to enter the 30-mph curve at too high of a speed due to his inadequate training on the territory and inadequate training on the newer equipment. Contributing to the accident was the Washington State Department of Transportation's decision to start revenue service without being assured that safety certification and verification had been completed to the

level determined in the preliminary hazard assessment. Contributing to the severity of the accident was the Federal Railroad Administration's decision to permit railcars that did not meet regulatory strength requirements to be used in revenue passenger service, resulting in (1) the loss of survivable space and (2) the failed articulated railcar-to-railcar connections that enabled secondary collisions with the surrounding environment causing severe damage to railcar-body structures which then failed to provide occupant protection resulting in passenger ejections, injuries, and fatalities.

1. Factual Information

1.1 Accident

On December 18, 2017, at 7:34 a.m., Pacific standard time, southbound Amtrak (National Railroad Passenger Corporation) passenger train 501, consisting of 10 passenger railcars, a power railcar, a baggage railcar, and a locomotive at both ends, derailed from a highway overpass near DuPont, Washington. (See figure 1.)

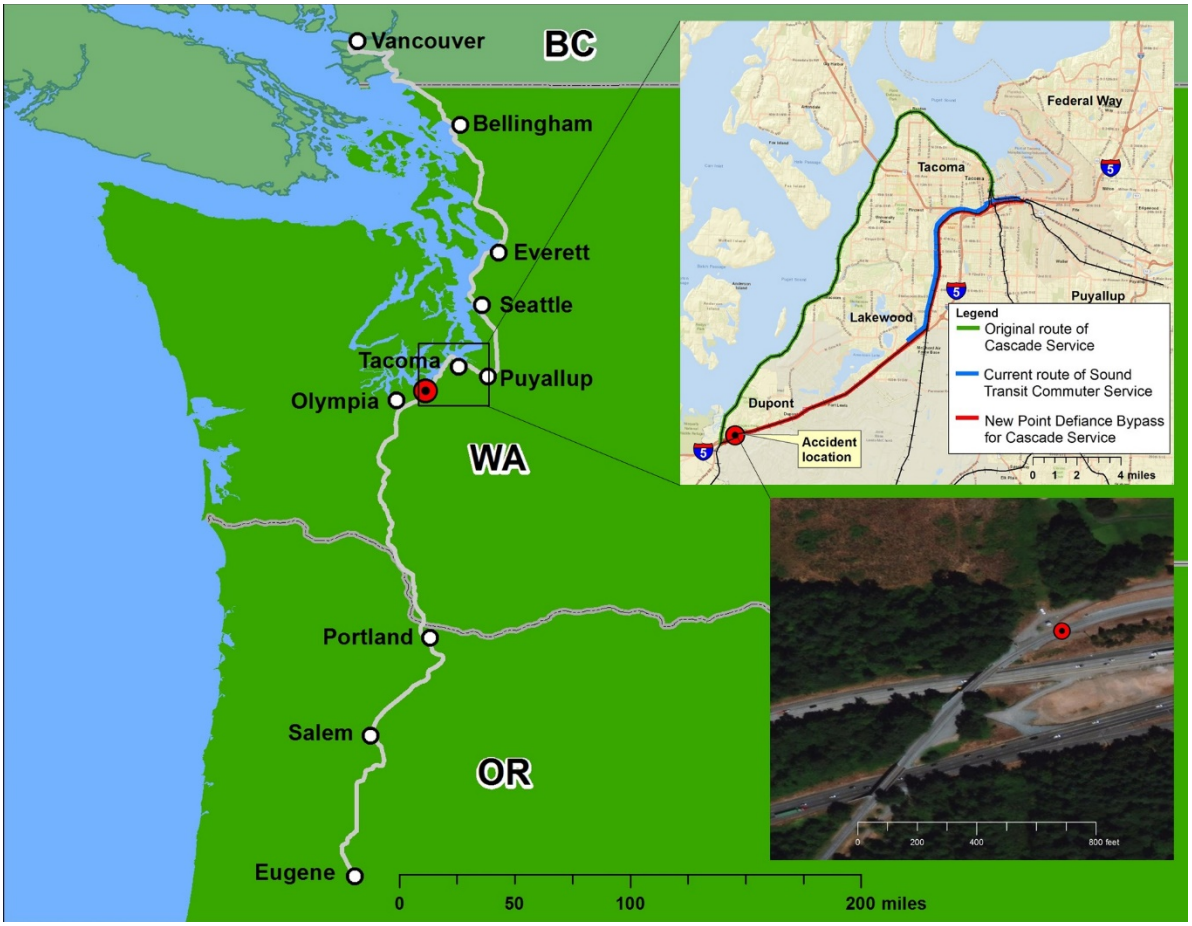

Figure 1. Accident location and Point Defiance Bypass.

When the train derailed, it was on its first revenue service run on a single main track (Lakewood Subdivision) at milepost (MP) 19.86. Several passenger railcars fell onto Interstate 5 (I-5) and hit multiple highway vehicles. At the time of the accident, 77 passengers, 5 Amtrak employees, and a Talgo, Inc. technician were on the train.[1] Of these individuals, 3 passengers were killed, and 57 passengers and crewmembers were injured. Additionally, 8 individuals in highway vehicles were injured. The damage is estimated to be more than $25.8 million. At the time of the

[1] Talgo, Inc., which was the original manufacturer of the passenger railcars, has the railcar service and maintenance contract.

accident, the temperature was 48˚F, the wind was from the south at about 9 mph, the visibility was 10 miles in a light rain.

1.2 Accident Narrative

On the morning of the accident, Amtrak's designated on-the-job (OJT) trainer called the train 501 engineer to brief him on the new territory.[2] They discussed the upcoming trip, including the curve at MP 19.86. The OJT trainer suggested that the engineer slow down early and take his time.[3]

Prior to the train's departure, the conductor, the qualifying conductor, and the engineer conducted a job briefing. They discussed the general track bulletins (GTB) and other items applicable to the trip. In addition to the operating crew, there was one lead service attendant (LSA) and one LSA trainee. The entire crew boarded the train at its originating location, Amtrak's Holgate Street facility in Seattle.

Train 501 departed the Holgate Street facility at 6:09 a.m.[4] It was still dark outside, and the weather at that time was overcast. The crew moved the train just beyond the yard to the first passenger stop at King Street Station MP 0.03. Train 501 departed King Street Station at 6:10 a.m. (scheduled departure 6:00 a.m.), 10 minutes late. Train 501 proceeded south to MP 38.2 where it diverged onto the Point Defiance Bypass at TR Junction MP 38.2. The train arrived at 7:13 a.m. (32 minutes late) at Tacoma Dome Station, MP 2.0 on the new bypass. The train departed Tacoma Dome Station at 7:17 a.m.

The engineer was accompanied in the cab of the locomotive by a qualifying conductor who was making his first trip qualifying on the physical characteristics of the territory.[5] Early in the trip, the engineer and qualifying conductor called out wayside signals and discussed job-related topics.[6] At 6:20 a.m., the engineer told the qualifying conductor that this trip was a learning experience for him, including what throttle position to use to maintain speed, and that he had only

[2] Amtrak's title for this supervisor was road foreman of engines and his specific duties were to manage the on-the-job training of the employees from Amtrak's Zone 10, which included engineers based in Seattle, Washington; Spokane, Washington; Shelby, Montana; and Portland, Oregon.

[3] Supporting documentation referenced in this report can be found in the public docket for this accident accessible from the National Transportation Safety Board's (NTSB) Accident Dockets web page by searching RRD18MR001.

[4] The train was scheduled to depart at 6:00 a.m. but was delayed due to a mechanical issue. The problem was resolved by removing the multiple-unit cable, thereby isolating the trailing unit and having everything run from the head end locomotive.

[5] This conductor will be referred to as the "qualifying conductor" in this report because even though he was a qualified conductor, he was not qualified on the Point Defiance Bypass territory. The engineer and qualifying conductor had not previously worked together. Conventionally, the qualified passenger train conductor was stationed in the train to attend to the passengers. The conductor was responsible for the overall safety of the train's operation, although most decisions were made collaboratively with the engineer, the conductor was in charge of the train.

[6] Amtrak had installed inward- and outward-facing audio and image recorders capable of providing recordings to verify train crew actions. The information in the accident narrative in this report was gathered from the crew interviews and the inward- and outward-facing audio and image recordings.

operated one roundtrip over the new territory. At 6:30 a.m., rain was falling, and the train's windshield wipers were operating.

For most of the trip, both the engineer and qualifying conductor remained seated, facing forward and looking out of the front windshield. They occasionally looked at their respective paperwork on the desk in front of them. The qualifying conductor filled out an unofficial Signal Awareness form.[7] He also referenced the Central Puget Sound Regional Transit Authority (Sound Transit) timetable. The engineer occasionally looked down at the gauges on the operating panel. Throughout the trip, the engineer passed over grade crossings and appropriately sounded the bell and horn as required. The engineer occasionally communicated by radio with the Amtrak conductor who was in one of the passenger railcars. At the beginning of the trip, the qualifying conductor was communicating operating issues to the engineer, such as signal aspects. Later in the trip and nearer to the accident, the qualifying conductor and engineer conversations were about future trips and job assignments.

The engineer operated his train at or near track speed and saw the MP signs at MP 16 and MP 17. He believed that his next significant maneuver was to begin slowing the train about 1 mile before the curve at MP 19.86. At 7:32:07 a.m., the train passed the northbound switch into DuPont Yard (MP 17.7), and the engineer said out loud, "DuPont." At 7:32:16 a.m., the train passed the advance speed restriction sign at MP 17.8, which was about 2 miles before the curve.[8] The engineer was looking forward but did not recall seeing this sign. He told investigators during his interview that he was not looking for that sign because it was too far in advance of the curve to be concerned about slowing down at that point.[9]

At 7:32:21 a.m., the train's headlights reflected off the white milepost sign (MP 18). Two vehicle headlights were seen on a road that runs behind to the right and behind the milepost sign. At 7:32:26 a.m., the engineer directed his gaze to the right as the train passed that sign. The engineer told investigators that he was looking for the MP 18 sign but did not see it. He told investigators that at the time he thought he had not yet reached that location.

During the next 25 seconds, the train traveled under three I-5 cross street overpasses, the third one at MP 18.53. The engineer was planning to apply the train brakes about 1 mile before the curve when he reached the sign indicating control point (CP) 188.

At 7:32:55 a.m., the engineer briefly looked at the gauges. The signal at CP 188 was visible ahead and was green (clear). A silver signal bungalow could be seen to the right of the signal. The CP sign (1876) was washed out by the reflection of the headlight in the silver signal bungalow. Investigators noted that 3 seconds later, the CP 1876 sign was detectable as a white rectangle in front of the signal bungalow. However, the markings appeared washed out and difficult to discern,

[7] The Signal Awareness form had not yet been vetted and thus was not finalized.

[8] The advance speed restriction sign is also referred to as the 'advance warning board.'

[9] Sound Transit used BNSF Railroad's (BNSF) standard for speed reduction signs which are placed 2 miles before the speed restriction. The 2-mile reduction is based on the notice necessary for slowing freight trains. Passenger trains slow more quickly when the brakes are applied and do not have to start reducing speed until much closer to the restriction.

even as the train passed the sign. During this time the qualifying conductor was looking out the front windshield.

At 7:33:06 a.m., the sign for MP 19 was visible. The engineer asked the qualifying conductor about his return trip to Seattle. Three seconds later the qualifying conductor began to reply to him, and the train passed the MP 19 sign at 7:33:10 a.m. At 7:33:12, just over 1/2 mile from the curve, the intermediate signal at MP 19.8 first came into view.

As the qualifying conductor was responding to the engineer's question, a series of three double "beeps" were recorded in the cab of the locomotive at 7:33:20 a.m. The engineer immediately made a minimum brake application. A warning light (consistent with overspeed traction lockout) illuminated on two screens on the engineer's control panel. On the left screen, flashing text and an illuminated warning appeared. On the right screen, an illuminated warning appeared underneath the speedometer. After the beeping started, the engineer looked to his left and then moved the automatic brake handle forward slightly. The conversation between the two crewmembers continued during this time, with the engineer looking left toward the qualifying conductor and asking him another question. The qualifying conductor gave a brief reply, then the conversation paused. The engineer looked to his right at the display, looked forward again for 1 second, back to the right at the display for another 2 seconds, then looked forward. He then looked at the left display and said, "I guess that happens when…" The conversation paused again as the engineer looked down at the desk to his left. He then looked to his right, and back forward again.

At 7:33:34 a.m., the concrete structural walls were visible on both sides of the track leading up to the Mounts Road overpass near MP 19.5. The 30-mph speed restriction sign at the entry to the curve at MP 19.75 was visible.

At 7:33:38 a.m., the engineer looked to the right and back forward again. Three seconds later he leaned forward and said, "We just tripped the overspeed." (The engineer told investigators that he was unfamiliar with the alarm for an overspeed on this new locomotive. He said it was not covered during his training and he had not experienced it the few times he had operated the locomotive.) The qualifying conductor was also looking forward.[10] The engineer then pushed the automatic brake handle forward to the "Handle Off" position and looked down at the automatic brake handle.[11] He removed his hand from the automatic brake handle, reached for the independent brake handle, and then back to the automatic brake handle.

The engineer told investigators that he had seen the signal at MP 19.8 and initially thought that they were at CP 188.[12] A moment later, he saw the 30-mph speed restriction sign and realized that they were nearing the entrance of the curve. At 7:33:44 a.m., he called out an expletive, and 3 seconds later said, "We're dead." The train speed decreased from 83 mph to 78 mph as the train

[10] The qualifying conductor told investigators that the speedometer on the conductor's side of the locomotive, after a period of time, goes blank. It can be re-illuminated by pressing a button. However, the conductor stated that he did not re-illuminate the screen because he was focused on the physical characteristics of the territory and referencing his General Track Bulletins.

[11] The "Handle Off" position slowly reduces the brake pipe pressure to 0 psi at a full-service brake rate.

[12] The Brotherhood of Locomotive Engineers and Trainmen (BLET) local chairman told investigators, "CP188 actually looked like – there are some similarities to the signal that was at the curve."

entered the left-hand curve at MP 19.8 where the 30-mph speed took effect. The engineer did not make an emergency brake application before the accident.

About 7:34 a.m., the lead locomotive and the following seven coaches derailed, the locomotive and several coaches careened down a wooded embankment, some reaching and blocking the southbound lanes of I-5. Two coaches came to rest on the overpass and several cars went down the embankment to the left of the overpass while the trailing unit (AMTK 181) remained on the rail just short of the overpass.

Figure 2. Aerial photograph of accident. (Photo provided by Washington State Police [WSP].)

During the postaccident interview, the engineer was asked if he had any thoughts about why he did not see the two wayside signs he was looking for at MP 18 and CP 188. The engineer stated:

> The only thing I can think of is the locomotive has different visibility from the front and the gauges take your eyes off the window. In thinking about it, the only thing I can think of is that I was possibly quickly looking at a gauge or something and missing the sign. That's my best – you know, I don't know.

The engineer also told investigators that he was aware of the curve at MP 19.8, and its 30-mph speed restriction. He stated, "I knew the curve was there. I was planning for the curve. It wasn't like I forgot it was there."

1.3 Amtrak Cascades Service

Train 501 was part of the Amtrak Cascades brand. This was a train service that initially operated between Seattle and Portland. After several trial operations dating back to 1994, the full

Cascades brand was rolled out on January 12, 1999. Amtrak extended a second train to Eugene, Oregon, in late 2000.

On October 1, 2013, the federal government shifted responsibility for funding the Amtrak Cascades services to states served, in accordance with the Passenger Rail Investment and Improvement Act (PRIIA) of 2008. The Amtrak Cascades system became a joint program of Washington State Department of Transportation (WSDOT) and the Oregon Department of Transportation (ODOT). Before this, Amtrak had contributed a portion of funding for the service. As a result, WSDOT and ODOT contracted with Amtrak to operate the Amtrak Cascades service. Since Amtrak no longer contributes financially to the operating costs, the service is now funded by ticket revenues and state funds.

Annually, the Amtrak Cascades service currently operates more than 4,000 departures and serves more than 810,000 passengers. Its trains, operating in the Pacific Northwest each day offer:

- Four daily round trips between Seattle and Portland (scheduled to increase to 6 trips with the return to the Point Defiance Bypass)
- Two daily round trips between Seattle and Vancouver, British Columbia
- Two daily round trips between Portland and Eugene, Oregon

1.4 Washington State Department of Transportation

WSDOT is a cabinet-level agency reporting to the governor and headed by the Washington secretary of transportation. In addition to building, maintaining, and operating the state highway system, WSDOT is responsible for administering the state ferry system; and working in partnership with others to maintain and improve local roads, railroads, and airports; as well as supporting alternatives to driving, such as public transportation, bicycles, and pedestrian programs.

1.4.1 WSDOT Rail, Freight, and Ports Division

Within the WSDOT, there is a Rail, Freight, and Ports division specifically responsible for managing grants, funding, and delivering capital improvements. The division has planning responsibilities for Washington's rail, freight, and port programs. The division also oversees the management of the Amtrak Cascades intercity passenger rail service along the Pacific Northwest Rail Corridor.[13]

As stewards of the Amtrak Cascades system, WSDOT is responsible for reporting; budgeting; performance tracking; construction project grant administration or management; local, regional, state, and national program coordination; working with the freight rail partners that own the railroad tracks; public outreach; and marketing activities.

[13] The Pacific Northwest Rail Corridor is 1 of 11 of the United States Department of Transportation (USDOT) officially designated high-speed rail corridors in the United States.

1.4.2 WSDOT Capital Improvements

In 2006, WSDOT developed its long-range plan for Amtrak Cascades that projected 13 roundtrips between Portland, Oregon, and Seattle, Washington, and 4 trips between Seattle, Washington, and Vancouver, British Columbia. WSDOT applied for and received federal American Recovery and Reinvestment Act (ARRA) grants in 2009-2010 to undertake the first set of improvements outlined in the plan. After being awarded nearly $800 million in funding, WSDOT began 20 rail infrastructure projects, including:

- Station upgrades and construction
- Track and signal upgrades
- New tracks, ties, and sidings
- New locomotives
- Landslide mitigation work

By the 2017 deadline, delivery of the 20 projects and service outcome agreements with Amtrak, BNSF Railway (BNSF), and Sound Transit were completed. On-time reliability increased to 88 percent, travel times between Seattle and Portland decreased by 10 minutes, and two more round trips were added between Seattle and Portland (for a total of six).

1.4.3 The Point Defiance Bypass Project (Lakewood Subdivision)

The Point Defiance Bypass project, initiated in late 2014, was the final project completed by Sound Transit using federal grants. The project included track improvements and a new Amtrak Cascades station in Tacoma. About $180 million was invested in improvements to the Point Defiance Bypass project.

Sound Transit was a contractor for WSDOT on this project. Sound Transit, hired and managed contractors which undertook the work. All improvements are owned by Sound Transit that is responsible for track operation and maintenance of the Point Defiance Bypass. BNSF is responsible for dispatching trains in the corridor. WSDOT directly contracted for and managed the work to build the new Tacoma Dome station.

Improvements on the Point Defiance Bypass included new and upgraded tracks, ties, and ballast on the 14.5-mile route; five reconstructed at-grade crossings, each with advanced warning and signal systems; four railroad bridge rehabilitations/reconstructions; and a second platform at the Tacoma station. Safety improvements provided in the project included:

- New traffic signals to coordinate with the train signals and railroad crossing gates to minimize queuing and keep traffic moving
- Median barriers to prevent vehicles from going around the railroad crossing gates

- New signage to alert vehicles to not stop on the tracks
- Sidewalks to provide Americans with Disabilities Act (ADA) accessible routes over the tracks in locations where sidewalks are present
- Wayside grade crossing horns to minimize noise outside of the intersection, so trains do not have to blow horns when approaching the intersection
- Fencing along both sides of the tracks to discourage trespassing

Sound Transit built a new double-track concrete trestle east of Freighthouse Square to increase capacity for passenger rail service in the corridor. WSDOT provided some funds to support a new Tacoma Trestle project. In addition, a second platform was built at the station to accommodate both Amtrak Cascades and Sounder trains. An extension was also added to the existing platform to accommodate Amtrak long-distance trains. WSDOT funded these improvements through a contract with Sound Transit, which managed the construction and is responsible for the ongoing maintenance.

1.5 Sound Transit

Sound Transit is a regional transit authority for the urban areas of King, Pierce, and Snohomish counties. Sound Transit plans, builds, and operates express bus, light rail, and commuter train services.

1.5.1 Office of System Safety and Quality Assurance

The Safety and Quality Assurance Division (SQA) is led by the chief safety and quality assurance officer, who is responsible for the development and implementation of safety programs and initiatives and is a direct report to Sound Transit's chief executive officer. Within the SQA the following directors oversee the following functions:

- Transit safety system director: Manages the functions of employee health and safety, safety management system (SMS) implementation, transit safety, transit safety system outreach and the Division's document control
- Construction and systems safety director: Manages the agency safety certification program and the construction safety monitoring and oversight for all capital projects
- Quality assurance director: Develops and manages agency quality requirements and provides oversight to ensure quality requirements are consistently implemented, monitored, and improved to meet agency and Federal Transit Administration (FTA) expectations for capital projects. The quality assurance director also develops and implements the agency's Safety Audit program to ensure compliance with regulatory safety requirements including the FTA, the State of Washington's safety oversight, the Federal Railroad Administration (FRA), and the American Public Transportation Association (APTA)

1.5.2 System Safety Program Plan

The Sound Transit's System Safety Program Plan (SSPP) provides an overview and outline of the safety program elements applicable to Sounder Commuter Rail. Each program element is further defined and supported by respective departmental procedures, manuals and other documentation as applicable. Sound Transit developed its SSPP using the American Public Transportation Association Manual for the Development of System Safety Program Plans for Commuter Railroads (APTA Manual) as guidance. The APTA Manual reflects the industry and FRA guidance on system safety program plans and is the current resource for developing system safety plans for commuter rail.

1.5.3 System Safety Certification Plan

Sound Transit's System Safety Certification Plan (SSCP) is intended to ensure that all facilities, systems equipment, procedures and plans, training programs, and emergency preparedness programs are reviewed for compliance with safety requirements by SQA in coordination with the Operations Department and Design Engineering and Construction Management Department. The chief safety and quality assurance officer is responsible to certify compliance through a Safety Certification Verification Report, prior to revenue service.

Sound Transit's Safety and Security Management Plan (SSMP) identifies plans, management structure, responsibilities, and authority for documentation, confirmation, activities, and tasks necessary to integrate safety and security into each phase of Sound Transit's capital projects. The SSMP describes the integration of safety and security activities, including methods for identifying, evaluating, mitigating, and resolving safety hazards and security vulnerabilities. According to Sound Transit, the SSMP is designed to do the following:

- Documents Sound Transit's commitment and philosophy to achieve the highest practical level of safety and security for customers, employees, contractors, and the public

- Describes safety and security processes and activities that minimize risk of injury and property damage

- Integrates safety and security functions and activities throughout Sound Transit's organizational and reporting structure

1.5.4 Construction, Safety Certification for Point Defiance Bypass Project

Sound Transit contracted the construction of improvements to the Lakewood Subdivision to accommodate the re-routing of Amtrak service (including WSDOT's sponsored Cascades service) through Sound Transit's Lakewood Subdivision. This relationship with WSDOT is reflected in the High Speed Intercity Passenger Rail Program Amended and Restated Construction and Maintenance Agreement (RRB-1043), dated June 30, 2016, as amended; and the Service Outcomes Agreement among WSDOT, Amtrak, and Sound Transit (RRB-1044), dated October 1, 2014. However, the operation of Amtrak trains through the Lakeview Subdivision is under an Operating Agreement between Amtrak and Sound Transit, dated January 1, 2015.

Sound Transit completed safety certification in accordance with the 2015 Sound Transit SSMP. The SSMP required the testing, verification, and documentation of static and dynamic testing of installed systems, signage, and clearances. Sound Transit conducted oversight, provided field staff during testing, and required contractor documentation to verify the testing and commissioning of installed equipment in accordance with relevant contract specifications. Grade crossing warning times were verified during multiple incremental train speed testing events. Once right of way tests, signal, and grade-crossings were completed and verified, Sound Transit management certified through a Safety Certification Verification Report that the Point Defiance Bypass project was ready to be transitioned to operations. This would allow for WSDOT and Amtrak to begin prerevenue testing. After prerevenue testing began, Sound Transit did not receive any reports of issues, deficiencies, or anomalies with the operating system, right of way or grade crossings from Amtrak.

1.5.5 Hazard Analysis

As part of the 2015 Sound Transit SSMP, Sound Transit developed a Point Defiance Preliminary Hazard Analysis (PHA) dated April 24, 2015. Included in this analysis, the hazard associated with speed reductions for curves was identified and the hazard was addressed as shown in table 1.

Table 1. Hazard associated with speed reductions for curves.

Location	Track curves
Hazard	Derailment
Potential Cause	Train speed not within specified limits at track curves
Effect Consequence	Potential derailment, equipment damage, major/minor injuries
Initial Risk	1C – Unacceptable
Existing Mitigation Measure	Timetable
Recommended Mitigation Measures	1. Ensure curves; elevation and speed limitations are designed according to Title 49 *Code of Federal Regulations* (*CFR*) 213.57 2. Develop inspection and maintenance procedures according to 49 *CFR* 213.233 Track Inspection 3. Future positive train control (PTC)
Suggested Resolution (Safety verification)	1. PTC regulated speeds according to timetables 2. Standard operating procedures
Residual Risks	1D – Undesirable
Remarks and Comments	Requires safety certification verification during integrated testing, commissioning, and operational phases.

Figure 3 includes the Hazard Risk Indices table used to determine the risk associated with identified hazards. Sound Transit staff are required to use this table as a tool to identify the risk associated with a hazard and then mitigate accordingly to the risk decision matrix to reduce or eliminate the hazard. Hazards that fall into the "Unacceptable" category require mitigations and are otherwise not acceptable. Hazards falling into the "Undesirable" category are allowed to exist with the approval and signoff of the "Executive Leadership Team Representatives (ELTR)" or

"Senior Oversight Approval Panel (SOAP)."[14]

SOUNDTRANSIT AGENCY SAFETY AND SECURITY MANAGEMENT PLAN

Figure 6. Risk Assessment Matrix

HAZARD RISK INDICES					
Frequency of Occurrence	Hazard Category				
	1 Catastrophic	2 Critical	3 Major	4 Marginal	5 Insignificant
(A) Frequent	1A	2A	3A	4A	5A
(B) Probable	1B	2B	3B	4B	5B
(C) Occasional	1C	2C	3C	4C	5C
(D) Remote	1D	2D	3D	4D	5D
(E) Improbable	1E	2E	3E	4E	5E

Each hazard category in the Risk Assessment Matrix in *Table 5* requires a specific level of action. *Table 5* represents the decision authority for each category.

Table 5: Hazard Decision Matrix

Hazard Risk Index	Risk Decision Criteria
1A, 1B, 1C, 2A, 2B, 3A	Unacceptable (Un)
1D, 2C, 2D, 3B, 3C, 4A, 4B, 5A	Undesirable (Ud) ELTR/SOAP concurrence required
1E, 2E, 3D, 3E, 4C, 4D, 5B, 5C	Acceptable with SSDCC review (Ar)
4E, 5D, 5E	Acceptable without further review (Ac)

Figure 3. Sound Transit hazard risk assessment chart.

1.5.6 Inaugural Service Point Defiance Bypass Project

National Transportation Safety Board (NTSB) investigators learned that WSDOT and Sound Transit representatives had several meetings to discuss a start date for service. According to WSDOT officials, on September 28, 2017, Sound Transit provided WSDOT with a starting date of December 18, 2017, to begin the inaugural service. Amtrak did not object to the date. Once

[14] The Sound Transit senior director of Safety and Quality Assurance (chief safety officer) is the chair of the SOAP and a member of the ELTR Safety and Security Design Construction Committee (SSDCC).

decided, Sound Transit, Amtrak, and BNSF proceeded in the preparation to operate on the new route.

On the date that the inaugural service began, the Lakewood Subdivision improvements were completed except for the positive train control (PTC) portion of the project which was required to mitigate overspeed derailments on track curves. This change should have required a change to the PHA document, however the PHA was never updated to reflect the absence of the designated hazard mitigation. Sound Transit turned the project over for revenue service with minimal controlling mitigations (standard operating procedures [SOP]) for the hazard of a derailment on curves. The final safety and security verification matrix included the same mitigations that were provided in the PHA; however, the timetable had also been added as a controlling mitigation. Using the hazard risk indices, Sound Transit assigned risks to the hazard as shown above. The initial risk for the curve hazards was "1C – Unacceptable" and the residual risk was "1D – Undesirable." In either case, before trains were operated, Sound Transit's system safety program required "Safety certification verification during integrated testing, commissioning, and operational phases." As previously noted, Sound Transit's SSMP references "procedures and training" as the lowest protective mitigation. On the day of the accident, the status of this hazard was marked as "Completed Accepted," even though PTC had not been implemented, which was the mitigating measure to eliminate the hazard.

1.5.7 BNSF Railway

Sound Transit contracted BNSF to provide the operating crews to operate their Sounder commuter operations. Further, they contracted BNSF to provide the train dispatching for the Lakewood Subdivision (Point Defiance Bypass). BNSF also prepared the timetable describing the Lakewood Subdivision. The timetable contained specific instructions to the operating crews pertaining to this section of railroad, including speed tables and the location of the accident curve. BNSF included the Lakewood Subdivision on its PTC Implementation Plan filing with the FRA to accelerate Sound Transit's PTC installation. The FRA approved BNSF's revised PTC Implementation Plan on March 6, 2018.

1.5.8 Amtrak

WSDOT contracted Amtrak to provide the operating crews and to maintain the equipment for the Cascades Service. Amtrak was required to provide qualified and trained operating and mechanical employees. Further, Amtrak had to provide the necessary supervision and recordkeeping that is required by the FRA. Amtrak attended some but not all the meetings preparing for the new service on the Point Defiance Bypass. (Preparing the operating crews for the new route is covered in section 2.5 of this report.)

The Amtrak locomotive supervisors explained to NTSB investigators that they had noticed that the timetable did not require the conductor to remind the engineer by radio of the upcoming speed restriction at MP 19.8 like other locations with a major required reduction in speed. (See section 2.5.2 in this report for further discussion on the requirements of the Fixing America's Surface Transportation Act of 2015 (FAST Act) and FRA Emergency Order 29.) The Amtrak assistant superintendent told investigators that the plan was to update Amtrak's Speed Limit

Reduction Action Plan through a General Order that would be issued implementing a "crew focus zone" at MP 19.8 on the new Lakewood Subdivision. This was to be completed in January several weeks after revenue service on the subdivision had begun. According to the assistant superintendent, this is the responsibility of the Amtrak Pacific Northwest Division and was overlooked prior to initiating service.[15]

1.6 Operations

The Lakewood Subdivision was owned and maintained by Sound Transit extending from TR Junction (MP 0.7) in Tacoma to BNSF's Nisqually Junction (MP 21.3). Sound Transit's commuter service operated between Lakewood (MP 10.1) and Seattle, Washington, and was contracted with BNSF to provide crews to operate the trains.[16] Amtrak, through contract with WSDOT, provided Cascades services along the entirety of the subdivision. Tacoma Rail operated on the southern portion of the subdivision between Nisqually Junction and Lakewood providing switching service to freight customers.[17] Tacoma Rail did not operate north of Lakewood. Occasionally, there was BNSF freight service to JBLM at the southern end of the subdivision.

The operating crews were governed by the 7th edition of the General Code of Operating Rules effective April 1, 2015. Specific instructions relating to the subdivision were found in the Sounder Commuter Rail Timetable No. 2, effective November 13, 2017 (Since BNSF provided the operating crews to operate the Sound Transit commuter trains and train dispatching services, BNSF also prepared the Timetable for the territory.) Modifications to the timetable and additional instructions were issued by General Orders – Sounder Commuter Rail Division. Also, each train (either Sound Transit, Amtrak, Tacoma Rail, or BNSF) that operated on the subdivision received a track warrant and bulletins specific to that train and that day of operation. Further, Amtrak train crews were governed by General Orders titled, Amtrak Pacific Northwest Division.[18]

1.7 Oversight

1.7.1 Washington [State] Utilities and Transportation Commission

The Railroad Safety Section of the Washington [State] Utilities and Transportation Commission (WUTC) ensures public safety by monitoring operations of the 25 railroad companies offering service in Washington. The section conducts safety inspections of various aspects of railroad operations. Under state authority, staff inspect crossings and walkways and evaluate, investigate, and recommend to the commission whether company filed petitions related to crossing changes and close clearances should be approved. Working with the FRA, commission staff conduct inspections of company operating practices, hazardous materials handling, crossing

[15] The Amtrak Pacific Northwest Division is based in Seattle and responsible for train operations in the Northwestern United States.

[16] BNSF train crews operate Sound Transit commuter trains from Seattle to Lakewood. Currently, there is no Sound Transit service south of Lakewood.

[17] Tacoma Rail is a local Short Line railroad.

[18] Supporting documentation can be found in the public docket for the NTSB investigative hearing, "Managing Safety on Passenger Railroads," July 10 – 11, 2018, accessible from the NTSB Accident Dockets web page by searching DCA18HR001.

signals and track. The section also provides education and outreach services as part of the Operation Lifesaver program. It also investigates accidents and complaints from the public and partners with local, state, and federal agencies to implement safety awareness and improvement programs.

1.7.2 Federal Railroad Administration

The FRA and the WSDOT were responsible for providing oversight of some elements of the Point Defiance Bypass Project and Sound Transit (subgrantee). Most of these elements are financial in nature, however, both agencies had a responsibility for ensuring that the project would be safe to operate. The terminology "safe to operate" is ambiguous. In its contract with Sound Transit for the construction and completion of the project, WSDOT required Sound Transit to complete a Safety Security Certification Verification Report to certify that the project was "safe and ready for use in revenue operations."[19] Although WSDOT used staff to ensure that the project was proceeding along according to schedule and budget, the role as it related to overseeing safety was limited. WSDOT had a staff member participate in Sound Transit's PHA activities and some testing, including grade crossing testing and validation. However, WSDOT did not have a formalized approach to oversee Sound Transit's implementation of its safety certification process. There was not a formal requirement for WSDOT to oversee safety activities of the subgrantee.

To meet the requirements of the federal funding mechanism, the FRA required submission of design plans, proposed expenditures, construction bids, and other formal documents that supported High-Speed Intercity Passenger Rail Program (HSIPR Program) funding requests under the American Recovery and Reinvestment Act of 2009 (ARRA). The FRA provided written approvals to WSDOT and other entities that included approvals for preliminary engineering, final design implementation, and construction stages for the bypass. The FRA also required that WSDOT submit a System Safety Program Plan, and because the project was being constructed by Sound Transit, Sound Transit's Safety and Security Management Plan would apply. Although these documents are sent to the FRA for review and guidance, if applicable, the FRA does not approve the plans.

The FRA's role for providing oversight is split between grant oversight and safety oversight. The policies and procedures as outlined in the grantee's or subgrantee's Safety and Security Management Plan (SSMP) governing the safety processes to be followed during project design, construction, and prerevenue testing are simply grant requirements. The FRA Passenger Rail Division provides guidance and feedback on these safety documents, but the FRA has no regulatory authority to approve or require changes to an SSMP or the SSMP's implementation. In addition to providing guidance, the FRA Office of Safety, including the Passenger Rail Division, will in some instances perform site visits and observe prerevenue activities. In the case of the Point Defiance Bypass, the Passenger Rail Division did review Sound Transit's hazard management program but only in respect to its meeting a deliverable of the grant.

There were 34 field and compliance inspections conducted by the FRA regional office prior to the initiation of revenue service, these inspections included track, signal, operating practices,

[19] Safety Security Certification Verification Report (SSCVR) for Point Defiance Bypass Track & Signal Improvement Project, October 27, 2017.

grade crossings, and motive power and equipment. However, safety certification was not in the scope of these inspections.

1.8 Personnel Information

1.8.1 Fitness for Duty

Both the 55-year-old engineer and the 48-year-old qualifying conductor had slept the night before going on duty the day of the accident. They both scheduled their sleep to be prepared for the upcoming shift. They both stated that they felt rested for the trip.

The engineer had been diagnosed with obstructive sleep apnea (OSA) which was being treated with a continuous positive airway pressure (CPAP) machine.[20] He was also being effectively treated for type 2 diabetes, hypertension, and high cholesterol. The qualifying conductor did not have any medical issues.

Following the accident, the engineer, conductor, and qualifying conductor on the Amtrak train underwent NTSB requested postaccident toxicological testing.[21] Both had evidence of medications used during their emergency treatment. In addition, the engineer had a trace amount of diphenhydramine and some naproxen in his system.[22] At the levels detected, neither would have been considered impairing. All other crewmembers tested negative for illicit drugs and alcohol.

1.8.2 Training and Experience

The engineer of train 501 was hired by Amtrak on May 17, 2004. He worked as a conductor for several years in the Pacific Northwest. Specifically, he worked out of Seattle and in Vancouver, British Columbia, as far east as Minot, North Dakota, and south to Portland, Oregon. He became a certified engineer in August 26, 2013, and worked mainly out of Portland (as far as Pasco to the east, Seattle to the north, and Klamath Falls to the south). The Amtrak road foreman of engines OJT told investigators that the engineer was very competent and conscientious, and he had no reservations about him. The assistant superintendent, road operations said that the engineer was safe and aware of what was going on.

The Amtrak qualifying conductor was hired by Amtrak June 15, 2010, in Seattle, Washington. He went to Amtrak's training facility in Wilmington, Delaware, where he spent 8 weeks as part of their new hire training. Afterwards, he returned to Seattle, and participated in

[20] A portable CPAP machine was among his personal items recovered from the locomotive. NTSB Research and Engineering verified use of the device with downloaded data.

[21] Testing was performed by the Federal Aviation Administration's (FAA) Bioaeronautical Sciences Research Laboratory and included more than 1,300 substances. Further, this testing was voluntary because it exceeded the mandatory FRA testing which only tests for a limited number of substances.

[22] *Diphenhydramine* is a sedating antihistamine available over the counter in a wide variety of products such as Benadryl and Unisom. It is used to treat cold and allergy symptoms and is also commonly the active ingredient in nonprescription sleep aids. Diphenhydramine carries the following warning: may impair mental and/or physical ability required for the performance of potentially hazardous tasks (such as driving, operating heavy machinery). Altered mood and impaired cognitive and psychomotor performance may also be observed. *Naproxen* is an over the counter anti-inflammatory pain medication often marketed with the name Aleve. It is not generally considered impairing.

on-the-job training for conductors. He became a qualified conductor on October 18, 2011. He was qualified to work out of Seattle to Portland, Spokane, and Vancouver, British Columbia. On the day of the accident, he was riding on the head-end of the train during his first trip qualifying on the Lakewood Subdivision and requalifying on the BNSF Seattle Subdivision.

The Amtrak conductor was hired on June 6, 2014, and promoted to conductor on October 28, 2015. At the time of the accident he was working as the conductor and located in one of the passenger railcars. There were no assistant conductors in the other passenger railcars.

1.8.3 Territory Qualification for Lakewood Subdivision

The Amtrak road foreman of engines OJT told NTSB investigators that the new territory "is not very challenging" because it was straight, mainline track with relatively few signals and crossings. He considered it less challenging than the territory between Tacoma and Seattle. This was also the general consensus of other Amtrak officials interviewed.

Amtrak's assistant superintendent (road operations), the road foreman of engines OJT from Portland, Oregon, and the road foreman of engines from Seattle, Washington, were among those that determined what training was appropriate for qualifying engineers and conductors on the physical characteristics of new territory.[23] They agreed that, given the length of the route, each engineer needed to take multiple observational trips over the territory (to physically see the territory and review the track charts and timetable), and was required to operate the train for at least one roundtrip over the territory. The assistant superintendent, road operations told investigators that the feedback they received from the FRA during the qualification process was positive.

Qualification on the new territory for engineers started on November 27, 2017. The qualification elements included operating a train and observational rides from the head-end and rear-end of locomotives. The qualifying period for all crewmembers lasted about 10 days. All observational rides were performed at night. The number of trainees in the operating compartment varied each trip but reached as many as seven people. After several observational rides, the engineers then operated the train over the territory under the supervision of a qualified foreman. According to Amtrak's assistant superintendent of road operations, every engineer was given as many trips as the qualifying road foreman felt was needed, and most were completed within one to two roundtrips and several trips of observation. Engineers who the road foreman believed needed additional time to qualify were brought back at a later date to operate the trains on the new territory.

A Brotherhood of Locomotive Engineers and Trainmen (BLET) local chairman was also involved in the initial training and qualification process and concurred with the qualification plans. He believed that the route was "a relatively simple piece of railroad" but realized that crews had to be careful going downhill towards the accident curve. He told investigators, "[The physical

[23] Amtrak's assistant superintendent, road operations was involved in the testing and qualifications of the engineers and conductors operating over the new territory. The road foreman of engines OJT (from Portland), in addition to having local responsibilities, covered a large part of Amtrak's Northwest region in charge of the on-the-job training of the locomotive engineers.

characteristics training] was adequate for me. But…in a perfect world, we would have been out there, you know, twice as long…if we could have had more exposure, all kinds of day."

The train 501 engineer made between 7 and 10 observational rides over the territory before operating the train over the territory under the supervision of a road foreman. He had operated the train twice northbound, and one time southbound, that included transiting the curve at MP 19.8. All the trips were made at night. After his last trip, the road foreman indicated that he did not believe the engineer required additional time operating the train to become qualified, and the engineer concurred.

Following their qualifying trips, engineers were given a final qualifying physical characteristics examination consisting of 12 fill-in-the blank questions. The examination was prepared by the local Amtrak supervisors based on a consensus of "what they believed" was important to know on the new route. The train 501 engineer took this examination on December 16, 2017, and achieved a score of 100 percent. The last question on the exam referenced the curve at MP 19.8:

> Traveling southward what is the permanent speed restriction for Talgo and passenger trains at MP 19.8 and is the 1.6% grade ascending or descending? (The answer was 30 mph and a descending grade).

The assistant superintendent, road operations stated that the greatest challenges in the last year was not having the new route available to Amtrak until they were close to starting passenger service. He told investigators: "If we could have had another, you know, couple of months to get that done, it would have been great… Having new service, new route and new locomotives all at one time made it a bit difficult as well."

However, he did not believe that there was a need to provide additional observation rides or time spent operating the train over the new territory.

The Amtrak road foreman of engines OJT told investigators:

> I felt they (the qualifying engineers) had enough exposure to the territory where they could run it safely as long as they were being mindful of their limitations, and if they felt less comfortable than others might, that they would run slower or be more cautious… I was not concerned anyone out there couldn't have operated over that track safely.

Conductors qualifying on the territory typically made observational rides from either the trailing locomotive or on one of the passenger railcars, and not the head-end of the locomotive. The conductor on train 501 made about five roundtrip observational rides on the Lakewood Subdivision. Conductors were also required to pass a final qualifying physical characteristics examination (which was different than the one administered to the engineers).

1.8.4 Wayside Cues for Speed Restriction

NTSB investigators were able to identify the advanced warning board sign at MP 17.8 while watching the outward-facing video. The BLET local chairman told investigators, "We don't normally use the advanced board, but you got to...especially in a new territory." Amtrak's road foreman of engines OJT told investigators, "An advanced speed board doesn't really have any effect on their operation because it's just too far out…to be of any use to them for braking for a curve 2 miles away." He added that some engineers may opt to brake earlier than 1 mile from the curve because of the downhill grade and the need to reduce the train's speed from 79 mph to 30 mph as they approach the curve. (See figure 4.)

Figure 4. Location of signage on the approach to MP 19.8.

NTSB investigators also viewed the locomotive's outward-facing video to assess the conspicuity of the wayside signs at MP 18 and CP 188. Investigators noted that the sign at MP 18 became conspicuous after the train had passed a grade crossing at MP 17.34. After the crossing, the MP 18 sign was visible for up to 10 seconds, although the numbers on the sign could not be read until the train was about 4 seconds away. NTSB investigators noted that when the train approached the sign, headlights from automobiles heading north on a street that ran parallel to the tracks could be seen from the operating compartment. However, the automobile headlights did not appear to 'wash out' the sign.

Amtrak's road foreman of engines OJT told investigators that he was about as familiar with the territory as any other engineer. He stated, "there was nothing significant" in terms of physical characteristics to remind himself of the upcoming curve. He did not have a good marker for himself for knowing when to slow down.

The road foreman who qualified the engineer stated that he used CP 188 as a marker of when to begin slowing down. He specifically instructed crews to start slowing the train before passing the signal for CP 188 (about 1 mile prior to the curve).

The engineer believed the more he operated on a new territory, the more likely he was to use external cues to help identify where he was on the tracks. On territories where he had extensive operating experience, he cited stationary objects as potential cues, including bridges, buildings, siding switches, and very often signals.

1.8.5 Familiarity with the Siemens Charger Locomotive

In the summer of 2017, the Amtrak 501 engineer participated in training on the Siemen's Charger locomotive. His training class had a single instructor and about a dozen students. The training included general information during classroom instruction.

Students also went inside the locomotive and got exposure to the display screens and controls. Students toured the engine room and received instruction on its mechanical features. However, students were not able to operate the Charger locomotive at that time. According to the engineer, neither his classroom training nor his qualification rides included the activation of the overspeed alarm.

Amtrak's road foreman of engines OJT indicated that the controls for the Charger locomotive were like other locomotives. He added that the overall cab environment would feel new to the operating crews. He suggested that the screen displays were different and switches, such as the alerter reset button, were not the same.

A BLET local chairman told investigators that some engineers felt they were given adequate amount of time training on the Charger locomotive, while others believed they could have benefited from additional time. The local chairman told the engineers that those who felt they needed additional training should have requested it, and he was confident that Amtrak would have provided the additional training. However, he was not aware of any engineer asking for additional training.

The engineer operated the Charger locomotive on some, but not all, of his qualification rides. The engineer told investigators, "I wouldn't have run the [Charger] locomotive if I didn't feel comfortable with it."

The engineer stated that he had about 60 seconds to familiarize himself before departing. The train 501 engineer told investigators that during his accident trip he felt comfortable operating the Charger locomotive and was getting a feel for the gauges and an understanding where to look. He believed that he was focusing on the gauges more often than on a locomotive that he was more familiar operating. He was aware of blind spots in the periphery of the cab but did not need to change his operating strategy because of them.

As noted earlier in the accident narrative, the locomotive overspeed alarm was activated approaching the accident curve. The alarm was triggered when the locomotive exceeded 82 mph and not for the upcoming speed restriction at the curve. The engineer said he was familiar with

overspeed alarms on other locomotives but had not experienced one (either the visual or audio component) on the Charger locomotive until the accident trip. His first indications were the series of beeps and the illuminated lights emanating from the control panel at 7:33:20, about 27 seconds before the derailment. However, he did not know their meaning. He told investigators, "some of our locomotives will go into penalty without an alarm and other locomotives will give an alarm before going into a penalty, and I wasn't sure what it was."[24] After not seeing any penalty lights, he ascertained that "I wasn't in penalty, that it was just a warning, so I released the brake." (Event recorder data does not indicate that he had released the brake before the train derailed).

1.8.6 Crew Responsibilities

An Amtrak road foreman told investigators that the qualifying conductor is, "basically part of the crew... They're supposed to be calling out signals together, any restrictions" and can help with radio communications.[25]

After departing the Seattle station, the engineer and qualifying conductor called out some of the wayside signals. The qualifying conductor told investigators that the engineer's responsibility was to call the signals by radio to the conductor back in the passenger railcars, and that those two agree with the current signal.

The engineer told investigators that he had no expectations that the qualifying conductor would help him with train operations, including locating wayside signs, during their trip since the qualifying conductor had not previously traveled over the Lakewood Subdivision. The qualifying conductor also told investigators about his expectations of his role on this trip while he was qualifying on the territory. He stated:

> As a qualifying employee, learning the physical characteristics of the territory… you have no involvement with the operation of the train… just strictly observation first and foremost because you're learning the route. That's the whole purpose of you being there.

1.9 Damages Estimates

Sound Transit estimated the initial total track structural damages at $125,000. The damage to the bridge over I-5 was estimated at $225,000. In addition, repairs to a retaining wall and drainage cost $85,000.

The information in table 2 is the damage estimate for train 501. It was provided by Amtrak.

[24] When a locomotive "goes into a penalty," the air brakes are automatically applied with either a service or emergency application, and the power is reduced to idle. The only response available to the engineer is to wait for the train to stop and reset the system. The FRA indicated that they had tested some other locomotives and they all gave an overspeed audible alarm warning.

[25] The duties of the crewmembers are covered in the *Operating Rules*, *Special Instructions*, and the *General Order*.

Table 2. Train 501 damage estimate.

Equipment	Ownership	Disposition	Damage Estimate
WDTX 1402	State of Washington	Total loss	$7,237,000.00
AMTK 7903	State of Washington	Total loss	$2,712,000.00
AMTK 7454	State of Washington	Total loss	$1,298,000.00
AMTK 7554	State of Washington	Total loss	$1,298,000.00
AMTK 7804	State of Washington	Total loss	$2,005,000.00
AMTK 7303	Amtrak	Total loss	$2,005,000.00
AMTK 7504	State of Washington	Total loss	$1,298,000.00
AMTK 7424	State of Washington	Total loss	$1,298,000.00
AMTK 7423	State of Washington	Total loss	$1,298,000.00
AMTK 7422	State of Washington	Total loss	$1,298,000.00
AMTK 7421	State of Washington	Total loss	$1,298,000.00
AMTK 7420	State of Washington	Total loss	$1,298,000.00
AMTK 7102	State of Washington	Total loss	$1,062,000.00
AMTK 181	Amtrak	Undamaged	$0.00
TOTAL			$25,405,000.00

1.10 Equipment Information

All railcars in this report will be identified by their equipment number followed by a number that represents their position in the train, such as AMTK 7903 (2). Train 501 was 649-feet long and weighed 920,000 pounds. The P-42 locomotive on the rear of the train and the bistro railcar AMTK 7303(6) were owned by Amtrak. The Charger locomotive and the rest of the Mt. Adams trainset were owned by the Washington State Department of Transportation (WSDOT) and operated by Amtrak under contract agreements. (See table 3.)

Table 3. Train 501 equipment information.

Sequence	Car type	Road number	Weight (lbs.)	Length (feet)
1	Locomotive	WDTX 1402	265,000	71.5
2	Power	AMTK 7903	43,220	38.7
3	Passenger, business class	AMTK 7454	30,650	43.1
4	Passenger, business class ADA	AMTK 7554	30,650	43.1
5	Passenger, dining	AMTK 7804	27,780	43.1
6	Passenger, bistro	AMTK 7303	31,090	43.1
7	Passenger, coach class ADA	AMTK 7504	31,090	43.1
8	Passenger, coach class	AMTK 7424	31,090	43.1
9	Passenger, coach class	AMTK 7423	31,090	43.1
10	Passenger, coach class	AMTK 7422	31,090	43.1
11	Passenger, coach class	AMTK 7421	31,090	43.1
12	Passenger, coach class	AMTK 7420	31,090	43.1

Sequence	Car type	Road number	Weight (lbs.)	Length (feet)
13	Baggage	AMTK 7102	39,690	38.7
14	Locomotive	AMTK 181	268,000	69.0
Totals			922,620	648.9

1.10.1 Lead Locomotive WDTX 1402 (1)

This Siemens Charger passenger locomotive (SC44) is a 4,400 horsepower diesel-electric alternating current (AC) locomotive manufactured by Siemens Mobility in Sacramento, California. WDTX 1402 (1) was released from the Siemens Mobility factory on March 30, 2017. WDTX 1402 (1) underwent final acceptance by Amtrak, WSDOT, and Siemens for use as a lead locomotive in revenue service on November 17, 2017. WDTX 1402 (1) was first used in revenue service on December 10, 2017, and operated on five revenue trains until the incident.

1.10.2 Passenger Equipment

The Talgo Series VI trainsets were manufactured by Talgo for Amtrak and WSDOT between 1996 and 1998. This trainset was built in 1998. One 12-unit trainset and four 13-unit trainsets were produced, four of which were put into service on the Cascades line between Vancouver, British Columbia, and Eugene, Oregon, with major stops in Seattle, Washington, and Portland, Oregon, starting in 1998. A fifth trainset was originally slated for Amtrak service between Los Angeles, California, and Las Vegas, Nevada, but was eventually purchased by WSDOT and was the accident train's equipment.

The semipermanently coupled configuration of the trainset requires a long facility to be able to effectively service the railcars without uncoupling them. A special facility owned by Amtrak was built in Seattle to maintain the Talgo trainsets, with maintenance work completed by Amtrak agreement labor under Talgo supervision.

1.10.3 Rear Locomotive AMTK 181 (14)

AMTK 181 (14) is a P42-8 Genesis locomotive manufactured by General Electric in 2001. Amtrak owns, operates, and maintains a fleet of 191 P42 diesel locomotives and 13 identical P40 locomotives for use across the nationwide network in both regional and long-distance services.

1.10.4 Predeparture Inspections

On December 18, 2017, Amtrak qualified inspectors conducted an air brake test with no exceptions and a pretrip inspection on the entire train.[26]

Train 501's consist originated at the Amtrak Holgate Street yard and daily inspections were completed on both locomotives with no exceptions. However, while Amtrak mechanical personnel performed a sequence test to properly set up the locomotives in the consist, a minor electrical fault

[26] Having *no exceptions,* is equivalent to having no problems.

occurred that was corrected by mechanical personnel. Train 501 departed safely after incurring a 9-minute delay. (This was the cause of delay mentioned in section 1.2 of this report.)

1.10.5 Locomotive Postaccident Inspections

On February 23-24, 2018, WDTX 1402 (1) was examined. With the extensive damage, an auxiliary air compressor had to be connected to the locomotive. When tested, the brakes applied and released properly on the locomotive from both service and emergency applications.

On January 31, 2018, locomotive AMTX 181 (14) was static tested with an exemplar locomotive WDTX 1401 at the Amtrak Seattle maintenance facility. The control cable was connected between the two locomotives. The control cable circuitry was checked and locomotive AMTX 181 (14) functioned as designed with no failures.

1.11 Crashworthiness and Derailment Description

1.11.1 Talgo Railcar Design

The Talgo passenger equipment has a unique design, different from conventional United States passenger equipment. (See figure 5.) Several references are made to specific nomenclatures. The illustrations below serve as a key to those railcar parts and structures.

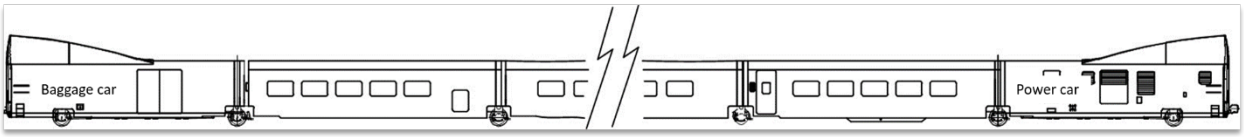

Figure 5. Side view of the Talgo trainset.

The Talgo Series VI trainset is designed with one rolling assembly located between each railcar, except for the baggage car (in the rear) which has two. Except for the baggage car, the railcars, when joined together to form the trainset, include one rolling assembly attached to the end of a railcar, referenced as the supported end, and a support structure installed on the end of the joining railcar, referenced as the suspended end. The suspended end of the railcar is attached to the end wall of the supported end of the railcar. The accident train was configured to have the supported end of each railcar oriented south or leading in the direction of travel. Front and rear orientations are established as follows: the supported ends will be referred to as the front or the leading end of the railcar. The suspended end will be referred to as the rear or trailing end. (See figure 6.)

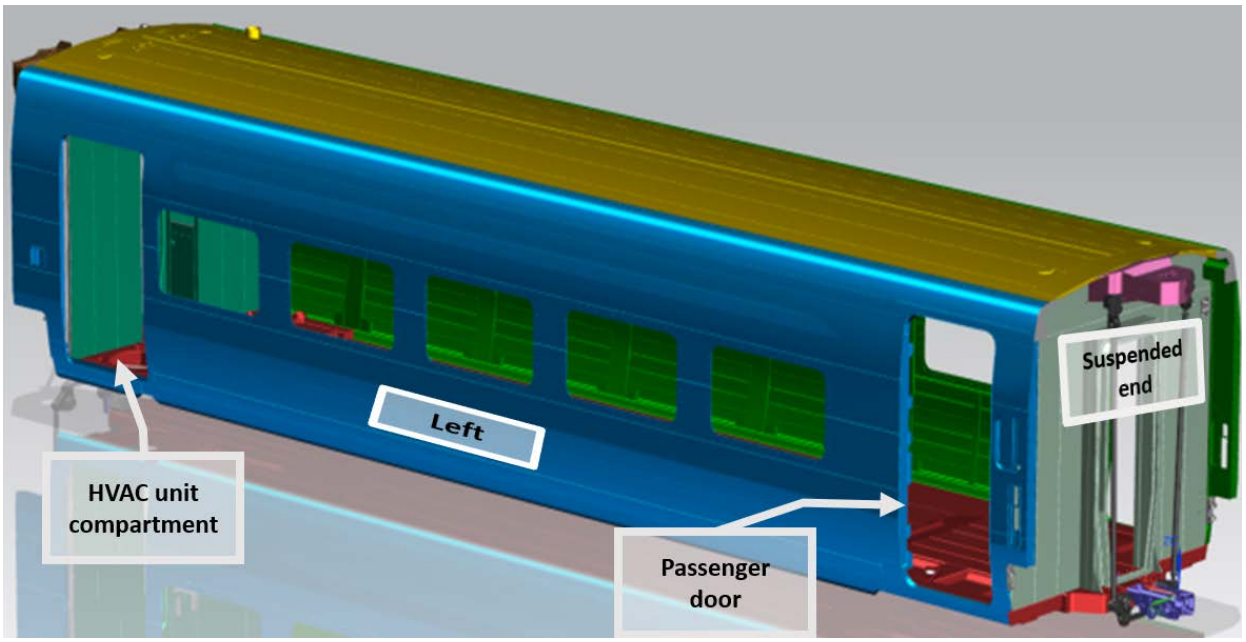

Figure 6. Talgo passenger railcar.

The supported end of the railcar, shown in figure 7, consists of the rolling assembly (shown in grey), the tower assembly (green), and the air spring suspension (blue). In this report, we refer to the complete system as the rolling assembly.

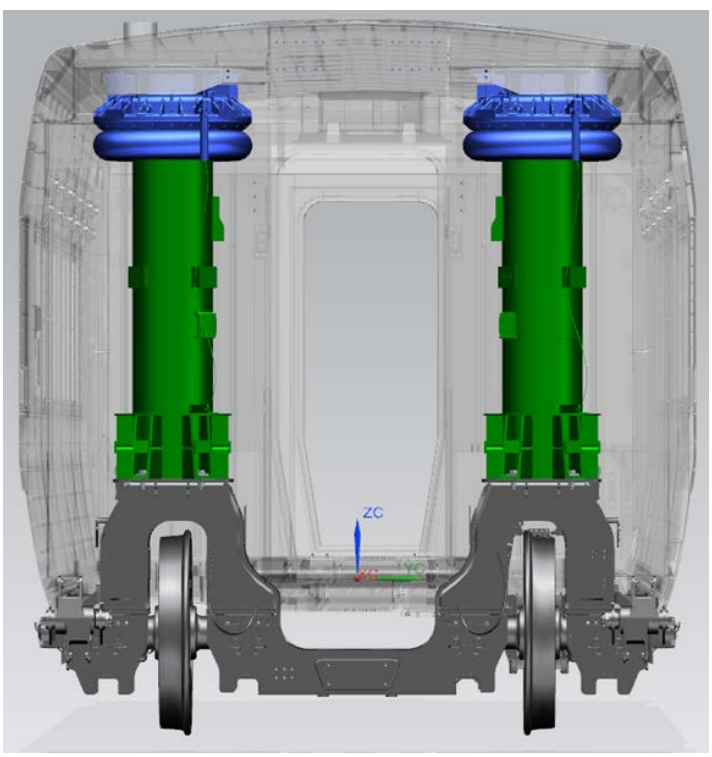

Figure 7. Supported end of Talgo railcar.

The rolling assembly is attached to the two adjacent railcars through an upper and lower steering link. The rolling assembly retention system includes primary retention cables, tower straps (red), and lower retention straps. In figure 8, to the left, the steering links are shown in yellow. In figure 8 to the right, the primary retention cable is shown in green, the tower strap is shown in red, and the lower retention straps are shown in orange.

Two weight bearer bars shown in red in figure 8 are attached to the supported end at the top near the air suspension and are joined at the bottom of the suspended end. The weight bearer system supports the vertical loads between each railcar.

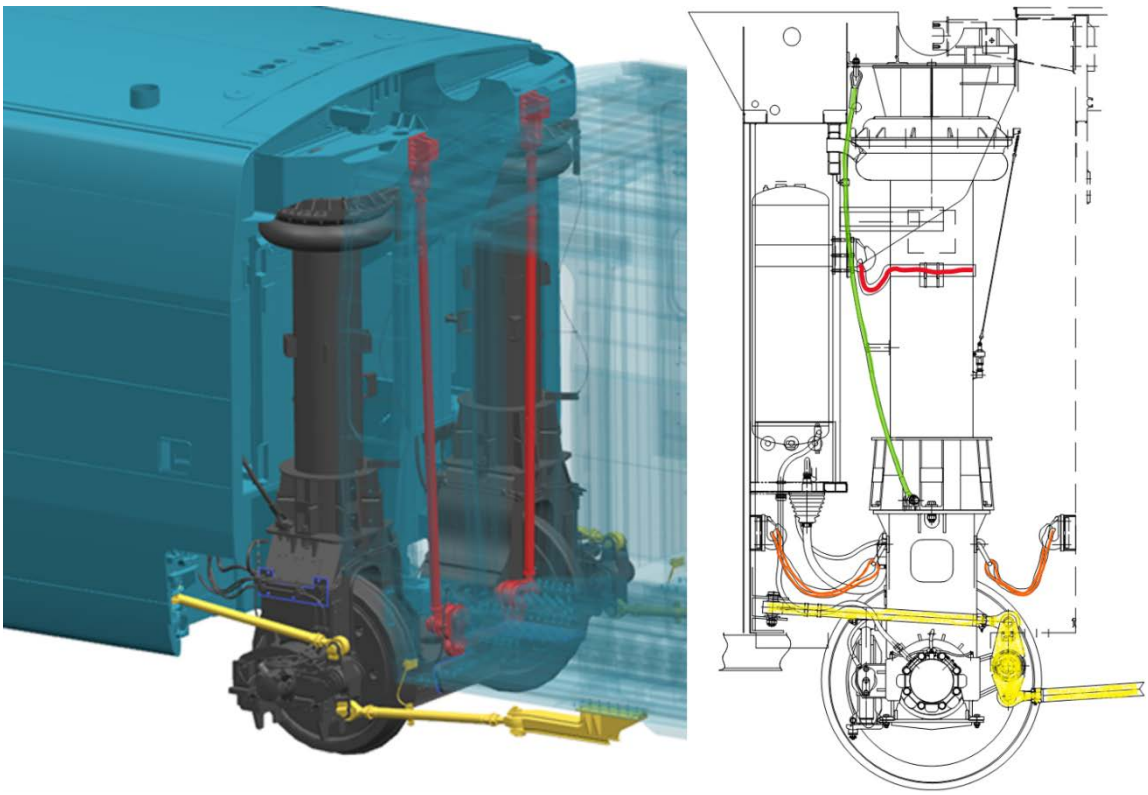

Figure 8. Rolling assembly cutaway and its side view.

The suspended end of a railcar consists of the weight bearer bars (two) shown in red in figure 8. These bars are attached through bolted connections to the supported railcar. The upper and lower guidance arms are shown in yellow in figure 8. As discussed previously, the guidance arms serve as the primary attachment of the rolling assembly to the railcar bodies.

The rail car-to-car connection or articulated connection (shown in figure 9) consists of two fixtures, each one attached to the railcar's structure, a shank that joins them together, some stops (buffers) which are mounted on lateral supports to transmit the lateral forces, and a rubber plate which provides it with a certain elasticity when it transmits compressive forces.

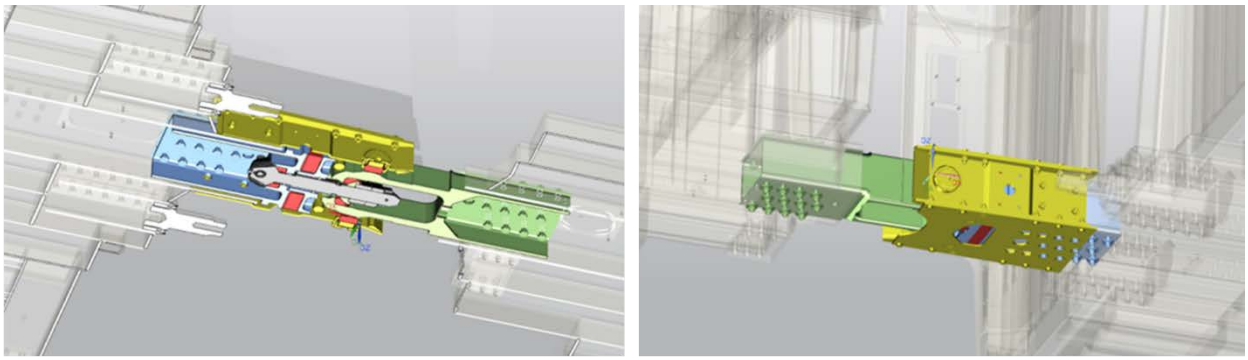

Illustration of interior components of articulated connection

Illustration of articulated connection

Figure 9. Articulated connections. The image on the right side is mirrored.

The design of articulated connections and railcars supported from an overhead support (tower assemblies) allows the railcars to swing like a clock pendulum. The railcars will swing when encountering a curve with super elevation.[27] This passive movement shifts the center of gravity further towards the inside of a curve allowing Talgo equipment higher speeds on curves compared to traditional passenger equipment. Because of this difference, there were three designations of speeds in Sound Transit's timetable. One was for freight trains, a second was for traditional passenger trains, and a third was for the Talgo trainsets.

[27] A super elevated curve is maintained with the outside rail of the curve higher than the inside rail like a banked race track. This realigns the center of gravity of the vehicle to the inside of the curve to offset the centrifugal forces to the outside of the curve and allows for greater speeds through the curve.

1.11.2 Derailment Description

The resting location of train 501 following the derailment is shown in figure 10. The locomotives, passenger railcars, and detached rolling assemblies are labeled and will be discussed individually.

Figure 10. Overhead with railcar positions labeled. Railcar 7421 was on top of railcar 7424, which is faded because it was under the overpass. (Photo provided by WSP.)

The locomotive derailed on the high side of the curve to the right and traveled through the ballast, down the embankment through a wooded area, and came to rest at about highway mile marker 116.6 on the southbound lanes of I-5. It came to rest upright in the original direction of travel, however, the damage on the right side of the locomotive was consistent with it being on its side at some point during the derailment.

The lead locomotive detached from the power railcar, AMTK 7903 (2).[28] The power railcar and passenger railcars, AMTK 7454 (3), 7554 (4), 7804 (5), 7303 (6), followed a similar trajectory as the lead locomotive and came to rest in the wooded area. AMTK 7903 (2) came to rest partially on the interstate and rotated clockwise about 90° from its original direction of travel and onto its left side. Passenger railcars AMTK 7454 (3), 7554 (4), 7804 (5) and 7303 (6) remained coupled and upright. Passenger railcar AMTK 7504 (7) rotated 180° from its original direction of travel and came to rest with its rear left side on top of the AMTK 7554 (4) and its front left side leaning against AMTK 7804 (5).

[28] The power car on this Talgo trainset provides power for lighting, convenience outlets, doors, and other systems that are not housed in the other individual cars. The power car does not provide traction power and is not intended to control the train. It resides at the front of the trainset, and is not intended to carry passengers.

The power railcar, AMTK 7903 (2), followed a similar trajectory as WDTX 1402 (1) through the woods. It traveled about 341 feet from the point of derailment (POD). The mechanical coupler between the power railcar and the locomotive fractured. (The Talgo consist is equipped with a standard AAR "H" tightlock coupler at each end, to allow coupling to a locomotive at each end.) AMTK 7903 (2) came to rest on its left side, rotated about 90° from its original direction of travel. AMTK 7903's (2) rear end structure abutted the front of AMTK 7454 (3) and witness indications were consistent with a collision with the orange trailer of a tractor and semitrailer (semitruck) that was traveling southbound on I-5.

AMTK 7454 (3) followed a similar trajectory as AMTK 7903 (2). The clockwise rotation of AMTK 7903 (2) pushed AMTK 7454 (3) in a counterclockwise rotation about 37° from its original direction of travel. It came to rest on the interstate about 314 feet from the POD. The articulated connection of AMTK 7454 (3) and AMTK 7554 (4) remained intact. Impact indications were observed between the end wall structure of AMTK 7554 (4) and AMTK 7454 (3). Further details of the articulated coupler connections can be found in section 2.6 of this report. The rolling assembly from AMTK 7454 (3) separated from its attachments, however, the assembly remained near the supported end of this railcar. (See figure 11.)

Figure 11. Detached rolling assembly from AMTK 7454 (3). (Photo provided by WSP.)

AMTK 7424 (8) traversed along the east (left) side of the track down the embankment and onto the highway coming to rest under the bridge overpass on its roof with its lead-end facing north. AMTK 7423 (9) and 7422 (10) came to rest on the bridge oriented laterally across the track. AMTK 7423 (9) was rotated about 50° counterclockwise to the track. AMTK 7422 (10) rotated about 120° clockwise to the track with the leading end of the railcar's left corner extending over the embankment.

Six articulated connections failed (the principal connections responsible for connecting the Talgo railcars together). These connections will be discussed in section 2.6 of this report.

Five rolling assemblies from the Talgo passenger railcars fully detached during the derailment and one partially detached. One of the fully detached rolling assemblies collided with passenger railcar, AMTK 7504 (7), in which three passengers were killed. (See figure 12.)

Figure 12. Detached rolling assembly tower partially inside AMTK 7504(7).

Rolling assemblies are located at the leading end (oriented relative to the direction of travel) of the 12 semipermanently coupled railcars. The rolling assembly from AMTK 7424 (8) was located underneath the bridge next to the left guardrail on the south lanes of I-5. The rolling assembly from AMTK 7421 (11) was located behind a Ford pickup truck on the south lanes of I-5. (See figure 13.)

Figure 13. AMTK 7421 (11) resting on AMTK 7424 (8). (Photo provided by WSP.)

As the lead locomotive and the first six passenger railcars of the train derailed to the right of the main track and down the embankment, the articulated connection between AMTK 7504 (7) and AMTK 7424 (8) fractured. AMTK 7504's (7) articulated coupler connection with AMTK 7303 (6), was also fractured.

The railcars trailing behind AMTK 7422 (10) then traveled to the left of the main track. In the aerial photograph visible marks in the ballast and soil show the path of travel of the separated train. (See figure 14.)

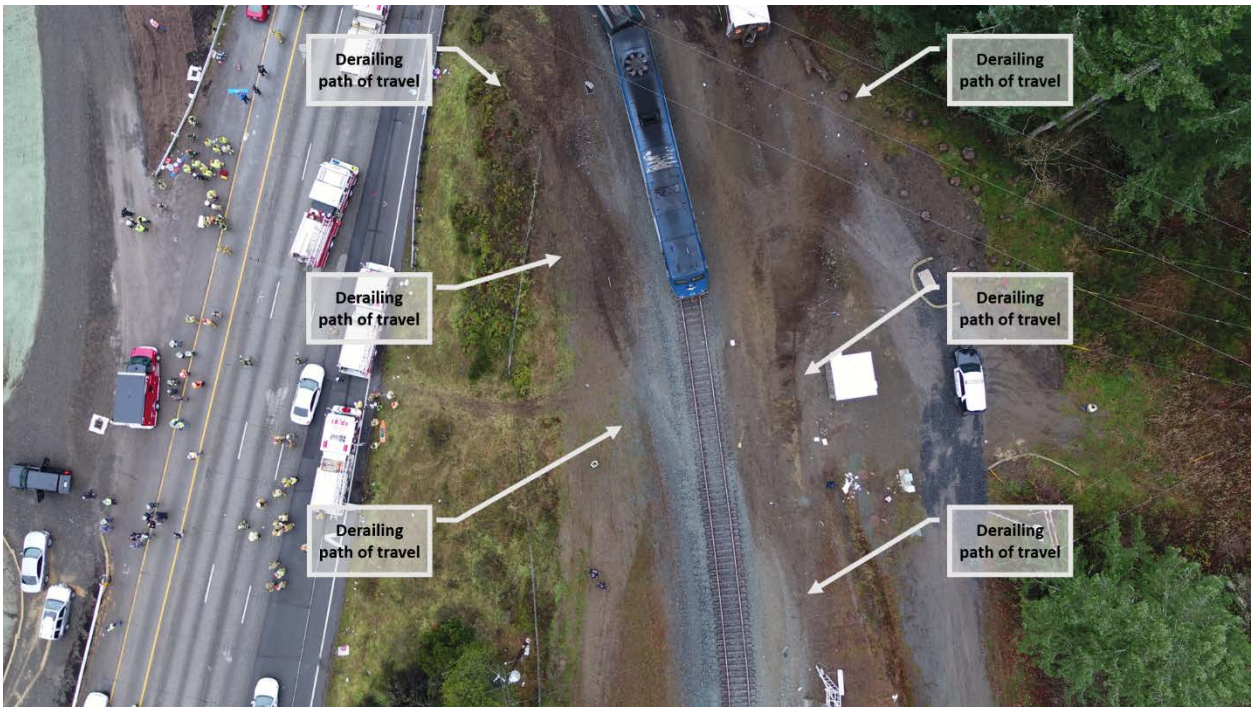

Figure 14. Derailing path of travel of Amtrak 501. (Photo provided by WSP.)

The lead locomotive, WDTX 1402 (1), received impacts to the front top section of the cab. The cab roof deformed into the operator's compartment about 13 inches. The roof panels sheared off, exposing the machine room compartments. The right side of the locomotive exhibited horizontal scrape marks along its full length and mud, dirt, wood, and rocks were lodged into the side panels, consistent with the locomotive proceeding through the woods on its side. The locomotive came to rest about 457 feet from the POD, on the interstate, upright and forward facing, indicating it righted itself as it moved through the wooded area, impacting the adjacent trees and passing through the highway guardrail, which was located beneath the locomotive. (See figure 15.)

Figure 15. WDTX 1402 (1) postderailment position.

During interviews with highway vehicle operators, a driver of a white Toyota RAV4 said she was traveling southbound in the right lane when her vehicle was struck from behind by the locomotive. The vehicle came to rest on the left side of the roadway, facing north in the southbound lane. (See figure 16.)

Figure 16. Highway vehicle struck by lead locomotive. (Photo provided by driver.)

1.11.3 Locomotive Crashworthiness Requirements

Locomotive crashworthiness requirements in the United States are governed by FRA regulations and AAR standards. The FRA regulations are outlined in Title 49 *Code of Federal Regulations* (*CFR*) Part 229, Subpart D, "Railroad Locomotive Safety Standards" and, 49 *CFR* Part 238, Subpart C, "Passenger Equipment Safety Standards." The following AAR standards are incorporated by reference: AAR S-580, AAR Manual of Standards and Recommended Practices, Section M, Locomotives and Locomotive Interchange Equipment, Standard S-580, Locomotive Crashworthiness Requirements and AAR S-5506, AAR Manual of Standards and Recommended Practices, Section M, Locomotives and Locomotive Interchange Equipment, Standard S-5506, Performance Requirements for Diesel Electric Locomotive Fuel Tanks. The Siemens locomotive was designed to meet all United States requirements. (See figure 17.)

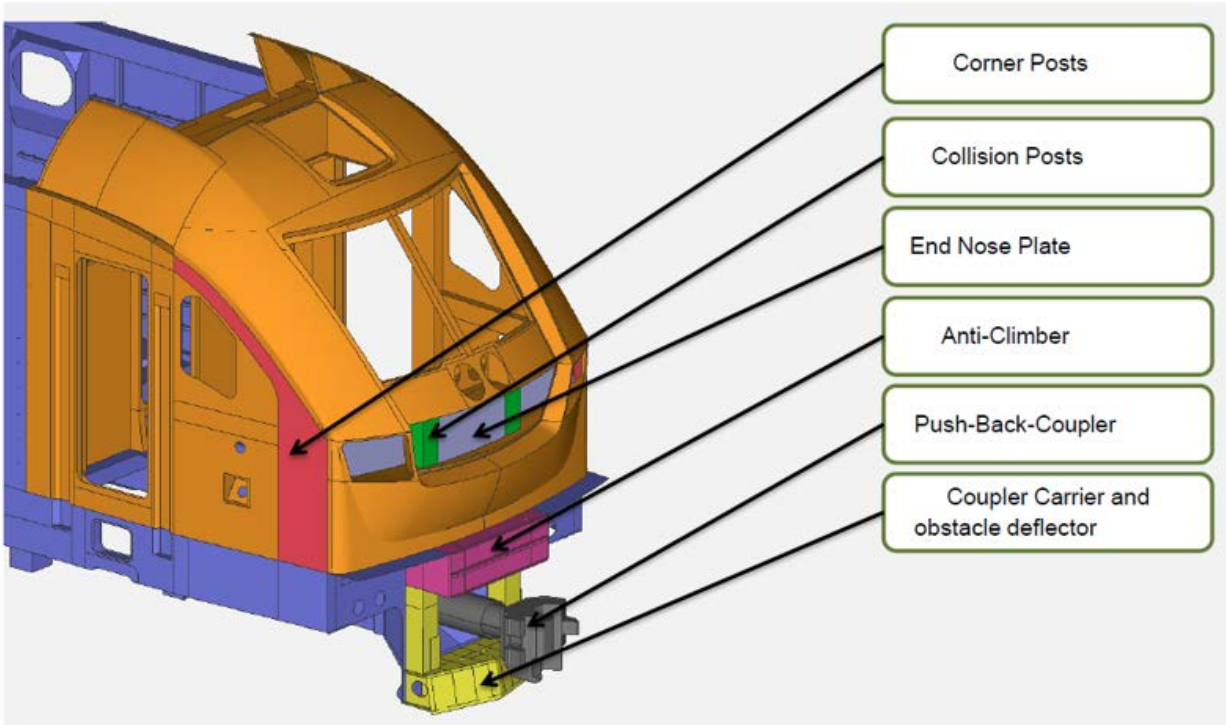

Figure 17. Siemens Charger locomotive crashworthiness features.

1.11.4 Postaccident Observations and Inspections

As a result of the derailment, there were some localized deformations at the front of the operating cab above the corner and collision posts. The operating cab windshield was destroyed; however, the laminated safety glass feature prevented the shattered glass from separating into pieces. The right side of the locomotive exhibited nonstructural compromised sidewall damage consistent with the locomotive being on its side. Abrasions were visible along the entire length, from the side sill (lower portion along the floor line) to the roof. The rear-end wall structure was severely loaded during the derailment and was separated from the right-side wall connections. The left-side connections remained intact. Damage along the left side was minimal. The roof panels (three total) were severed from their connections. (See figure 18.)

Figure 18. Damage to WDTX 1402 (1).

The damaged equipment was stored at the nearby military base, Joint Base Lewis-McChord (JBLM). Under the direction of the NTSB, Siemen's engineers examined the locomotive in January 2018. They reported there were no visual separations of the corner and collision posts, or visual separations or ruptures of the welded seams. Both side entry doors of the engineer's cab and the machine room access door were operable. The underframe was locally deformed, but the structural condition was intact. The crash energy management (CEM) features in the front and rear coupler was not activated. Both trucks and their retention mechanisms remained intact and attached to the locomotive. The fuel tank and the fuel tank inlet were not compromised because of this derailment.

1.11.5 United States Passenger Railcar Crashworthiness Standards

At the time the Talgo railcars were delivered to WSDOT, passenger railcar crashworthiness requirements were limited to a static end strength of 800,000 pounds. The requirements were prescribed in AAR Standard S–034–69, Specification for the Construction of New Passenger Equipment Cars, published in 1969. Section 6, paragraph (a), of the specification required that the railcar structure shall resist a minimum static end load of 800,000 pounds at the rear draft stops ahead of the bolster on the center line of draft, without developing any permanent deformation in any member of the railcar structure. The static end-strength requirement was based on longstanding practice and originated in specifications for United States Railway Post Office (RPO) railcars in the 1940s (Tyrell, 2001) (Blaine, 1979). Numbers of earlier RPO railcars, which were built to lower static end strength requirements, were crushed in train collisions. During a collision,

substantial compressive loads would be applied to such railcars. For railcars not built to the 800,000 pounds static end strength requirement, the results could be catastrophic, with structural collapse of the railcars and many postal workers killed. The introduction of railcars that met the 800,000 pounds static end strength requirement effectively eliminated this type of complete structural collapse.

On May 12, 1999, the FRA published a final rule, 49 *CFR* Part 238, "Passenger Equipment Safety Standards." In the section "Structural Standards for Existing Equipment," the final rule requires that all passenger equipment (other than locomotives that comply with an alternative standard as specified; private railcars; unoccupied vehicles operating at the rear of a passenger train; or equipment used in noncommingled service, as discussed below) in use on or after November 8, 1999, have a minimum static end strength of 800,000 pounds as specified in 49 *CFR* 238.203.

In addition to the static end strength requirement, requirements in the 1999 final rule for passenger railcar strength included: (summarized)

- Anticlimbing mechanism at the forward and rear ends capable of resisting an upward or downward vertical force of 100,000 pounds without failure

- Link between coupling mechanism and car-body such that equipment shall have a coupler carrier at each end designed to resist a downward thrust from the coupler shank of 100,000 pounds for any normal horizontal position of the coupler without permanent deformation

- Two full height collision posts having an ultimate shear strength not less than 300,000 pounds at a point even with the top of the underframe member to which it is attached

- Two full height corner posts capable of resisting a horizontal load of 150,000 pounds at the point of attachment to the underframe without failure

- Truck-to-car-body attachments shall have a truck-to-car-body attachment with an ultimate strength sufficient to resist, without failure, the following individually applied loads: 2 g-force [gravitational force] vertically on the mass of the truck; and 250,000 pounds in any horizontal direction on the truck, along with the resulting vertical reaction to this load

1.11.6 Talgo Crashworthiness Design

The Talgo passenger trainset was originally designed to meet the International Union of Railways (UIC) design codes (also known as leaflets). The codes include several design standards much like the AAR design standards in the United States. Specific to the construction of the railcar body, the Talgo passenger railcars were designed to meet the UIC-566, Loadings of Coach Bodies and their components, revision January 1990.

According to UIC-566, the body of the passenger railcar comprises the underframe, the side walls, the end walls, and the roof which form a tubular beam. The principal design characteristics of the railcar which are, according to the leaflet, obligatory provisions, are as follows:

> The end walls, strengthened by anticollision pillars, shall be so joined to the headstocks, cant-rail and roof that the maximum amount of energy is absorbed first by deformation of the end wall section before the passenger compartments are deformed.
>
> The coach body, in running order and mounted on the bogies [truck or rolling assembly], shall be designed that under all conditions, its natural frequencies differ from the hunting and pitching frequencies of the bogie, so that no resonance occurs throughout its speed range.[29]
>
> The railcar body shall be designed to withstand a 2000kN [449,617 pounds, less than United States standards] static compressive loads at the buffer or coupler level without permanent deformation. UIC-566 does not prescribe a structural strength requirement for anticollision pillars at the railcar ends.

Additional requirements in UIC-566 include the strength of the component parts mounted on coaches and the loads developed resulting from buffing impact (collisions). Mounted component parts shall be designed to resist the following gravitational forces (g):[30]

- Longitudinally: 5g
- Transversely: 1g
- Vertically: (c)g (including gravity), where c = 3 at the end of the coach, falling linearly to 1.5 at the coach center

For the end railcar, the power railcar and the baggage railcar, Talgo designed these to be more restrictive than the requirements in UIC-566. (See table 4.)

Table 4. UIC-566 compared with Talgo end car design load cases.

Load case	Talgo requirement	UIC-566
Longitudinal	6g	5g
Lateral	3g	1g
Vertical	3g	c
Main attachments loading cases.		

[29] (a) *Bogie* refers to the wheel-axle-frame assembly under each end of a car or locomotive. (b) Natural frequency in this context refers to a frequency at which an object(s) will vibrate at a specific rate called the object's natural, or resonant, frequency. Such an object(s) if not properly designed will vibrate strongly when it is subjected to vibrations at a frequency equal to or very close to its natural frequency potentially impacting ride quality and in severe cases can cause derailment.

[30] *Gravitational force* refers to the force of gravity or the force of acceleration. It is measured in g's, where 1 g is equal to the force of gravity at the Earth's surface.

According to Talgo, no specific requirements are prescribed in UIC-566 for retention of rolling assemblies.

1.11.6.1 Grandfathering Talgo Passenger Railcars

Because of the enactment of FRA's 1999 final rule, Amtrak, by letter dated October 18, 1999, petitioned the FRA pursuant to 49 *CFR* 238.203(d) to grandfather or permit the use of Talgo articulated trainsets on three corridors: the Pacific Northwest corridor between Eugene, Oregon, and Blane, Washington, via Portland and Seattle, the Southern California corridor between San Luis Obispo and San Diego via Los Angeles; and the corridor between Los Angeles and Las Vegas, Nevada. FRA approval was required because the trainsets did not meet the required compressive strength of 800,000 pounds applied at the coupler faces without permanent deformation of the body structure.

Title 49 *CFR* 238.203(d), "Grandfathering of non-compliant equipment for use on a specified rail line or line," provides a provision for a railroad to petition the FRA to permit the use of rail equipment not meeting the then-newly published requirement(s). The petitions submitted were required to include (summarized): detailed drawings and material specifications, engineering analysis sufficient to describe the performance of the static end strength and its performance in a collision, risk mitigation efforts employed in connection with the use of the equipment and a quantitative risk assessment demonstrating the use of the equipment in the service environment, is in the public interest and is consistent with railroad safety.

The FRA received a substantial number of filings for this petition, and several were quite extensive.[31] A public hearing was held on July 21, 2000, at which testimony was received from Amtrak, WSDOT, Talgo, the National Association of Railroad Passengers, the American Public Transportation Association, and Bombardier. The FRA considered the public comments in reaching their preliminary decision in September 2000 and subsequently authorized the use of Talgo Series VI subject to certain conditions.

The following is a summary of select conditions required:

- The railcars must be modified to increase the strength of the weight bearing bars (two per railcar) and their related supports to the railcar structure, to withstand, at a minimum, a 100,000-pound vertical load, applied either up or down

- The railcars must be modified by applying safety cables between the railcars and bogies to resist a minimum total longitudinal force of 77,162 pounds to resist separation of the railcar-bodies and rolling assemblies

- The railcars must be modified by applying safety cables around the top of each suspension column, affixed to the upper structure of the railcars to resist the application of a nominal 250,000-pound force, applied at the center of gravity of the rolling assembly

[31] See the FRA public docket at https://www.regulations.gov/docket?D=FRA-1999-6404.

- Amtrak must operate the railcars in dedicated trainsets as proposed in their submission. When operating in revenue or deadhead service, the baggage and power railcars shall be placed at the ends of the remaining railcars in the trainset and must not be occupied by passengers or crew

- The trainsets may be operated in either locomotive-hauled or push-pull service. In locomotive-hauled service, the trainset may be followed by a locomotive-type cab control railcar (such as depowered F40) at Amtrak's election. In push-pull service, revenue and deadhead trains must be operated with a locomotive or locomotive-type cab control railcar on both ends. In either locomotive-hauled or push-pull service, additional equipment in the train consist (such as passenger railcars, freight railcars, materials handling railcars, and bimodal equipment) is prohibited

- Maximum operating speed is 79 mph

- Amtrak must prepare an engineering analysis reviewing the design and securement of the steel structure affixed to the power railcar and the baggage railcar that contains the draft gear and collision posts

In making its final decision, the FRA established that they [FRA] must determine if in the context of a particular rail operation, the absence of otherwise compressive end strength causes the equipment to fall short of the performance expected of equipment having the otherwise required strength, so that its use was consistent with railroad safety. According to the FRA, the central purpose of buff strength is to ensure adequate compatibility among units of rolling stock used on the general railroad system with respect to collision risk. In making its final decision, the FRA reviewed the petition and all available information related to the construction of the Talgo trainsets, including (summarized):

- Results of finite element analysis provided to Amtrak by Talgo
- A one-dimensional lumped mass analysis conducted by LTK Engineering for Amtrak
- Photographs of accidents in Europe involving equipment of similar construction
- Public comments

In addition to the relevant information above, the FRA also considered (summarized):

- A risk assessment completed for Amtrak by Arthur D. Little Inc. (ADL). The risk assessment evaluated the impact of using Talgo trainsets in the Pacific northwest
- A crashworthiness evaluation of the Talgo Series VI completed by the John A. Volpe National Transportation Systems Center (Volpe)

- An FRA engineering staff inspection of Talgo equipment and review of operational issues that would have arisen since the introduction of the equipment
- Additional risk assessments by ADL

Overall, the FRA concluded that the engineering and other analysis provided assurances that the Talgo equipment could be expected to operate safely on the basis of moderate energy events (50 mph or less) which would present a higher probability of occurrence than more severe events.

In its docket, the FRA expressed concern regarding the expected performance of the Talgo equipment in higher energy events. The FRA stated that at closing speeds (referring to collisions), the Talgo train was expected to experience a greater lateral displacement than conventional equipment, and articulated connections were expected to fail. Thus, in collisions greater than 25 mph, the following dangers could arise (summarized):

- With failure of the articulated connectors that suspend the railcar bodies, in the absence of compressive forces, the light railcar bodies would be free to fall to the track structure or surrounding terrain with unknown results. (Conventional railcars are supported by trucks designed to remain attached except under very unfavorable circumstances)

- Comparatively greater lateral displacement of the passenger units would create a greater hazard of secondary collisions (such as by fouling an adjacent main line or impacting with a bridge structure or abutment)

In summary, the FRA determined that there was sufficient information submitted to establish that the five Talgo Series VI trainsets could be operated consistent with railroad safety in the Pacific Northwest Corridor at speeds up to 79 mph subject to specific conditions tied to the review and approval of the train control system.

Amtrak and Volpe had provided and developed information to characterize the crashworthiness of the trainsets under the conditions specified. However, given the uncertainty related to the crash analysis, risk assessment, and other issues discussed above, the FRA determined that the conditions attached to their approval would be necessary to secure a reasonable level of confidence such that safety would not be compromised.

Final approval was granted by the FRA on March 27, 2009, for the operation of 67 Talgo Series VI railcars (five trainsets) having met the conditions discussed above along with (summarized):

- Restricted to operations between Eugene, Oregon, and the United States/Canadian border near Blaine, Washington, and the route between Los Angeles, California, and Las Vegas, Nevada
- Operations on the Pacific Northwest Corridor are authorized, consistent with other railroad safety regulations (including, for example, 49 *CFR* 213.345) only

> upon acceptance by the associate administrator for railroad safety/chief safety officer of plans for, and installation of, a train control system meeting the requirements of 49 *CFR* Part 236

1.11.7 Test and Research

A selection of intact safety straps from the accident trainset and from an exemplar trainset were retained by the NTSB Materials Laboratory for further examination and mechanical testing. Tests to determine the tensile breaking strength for each of the submitted straps were completed. Results of the testing, documented in Materials Laboratory Factual Report 18-042, showed the straps fractured at loads that were about 10 to 50 percent of the breaking strength of 38,500 pounds. (See section 2.6 in this report for further discussion.) Full results of the testing are documented in Materials Laboratory Factual Report 18-042.

1.11.8 Vancouver Talgo Derailment

While investigating the DuPont accident, investigators became aware of a Talgo Series VI trainset derailment that occurred with Amtrak Train 516 in Vancouver, British Columbia, on December 17, 2018.[32] The derailment occurred at the Canadian National Railway Company (CN) Yard at MP 130.8, Yale Subdivision, about 1 mile south of the Vancouver Pacific Central Station. The train derailed while moving over a switch, and two railcars from the trainset struck a nearby freight railcar parked on an adjacent track. There were no injuries reported by crew or passengers, and according to Amtrak, the train was moving at 3 mph. The NTSB traveled to Seattle, Washington, to examine the trainset after it was moved from Vancouver. Two Talgo Series VI passenger railcars exhibited sidewall damage consistent with a raking collision. One of the railcars exhibited two tears in the sidewall near the side passenger door. The door was also damaged during the collision and was removed during the recovery operation. The longest tear was measured to be about 4 feet in length occurring at the midpoint of the door, extending toward the passenger window. The other tear was measured at 18 inches in length. The side of the railcar was abraded from being in contact with the freight railcar. The height of the abrasion was measured at 38 inches. The passenger door was found inside of the railcar, placed there after the derailment. The door's window was broken, and the exterior aluminum covering was torn and damaged. Based on all observations, there were no indications passenger-occupied space was compromised. The other passenger railcar was abraded along its side wall without significant compromise of the structure. There were two areas where the sidewall was torn and fractured. One passenger window was broken, likely from contact with the freight railcar when it derailed.

[32] The trainset involved was known as the Mt. Olympus trainset, so designated with branding on the side of the train.

1.12 Survival Factors

This section of the report focuses on the issues related to the survivability of the passengers and the train crew that were traveling in the locomotive and passenger railcars, and the ability of the passengers and crew to safely evacuate the railcars. In this section, additional information regarding the passenger railcar interior design, safety features, and exits are examined.

1.12.1 Locomotive Survival Factors

Damage to the interior of the operating cab was constrained primarily to the leading end, most notably at and above the front glazing (windshield). The vertical space of the cab interior was reduced to about 19 inches between the operator's desk and the ceiling, and to 66 inches from the floor to the ceiling. The height above the seats was reduced to 66.5 inches. All doors, both side doors, and the machinery room access door, were fully functional after the accident. The cab ceiling emergency exit hatch was dislodged from the vehicle. The hatch is comprised of two parts; the upper, or outer, part came to rest in the wooded area between the track and the interstate, and the inner portion was inside the cab. Investigators estimated the locomotive lost about 5 percent of its occupied volume in the cab. Figure 19 is a cutaway illustration of the locomotive cab showing the cab design and underlying structure and an interior photograph of the accident cab taken from the left side of the cab towards the engineer's seat on the right.

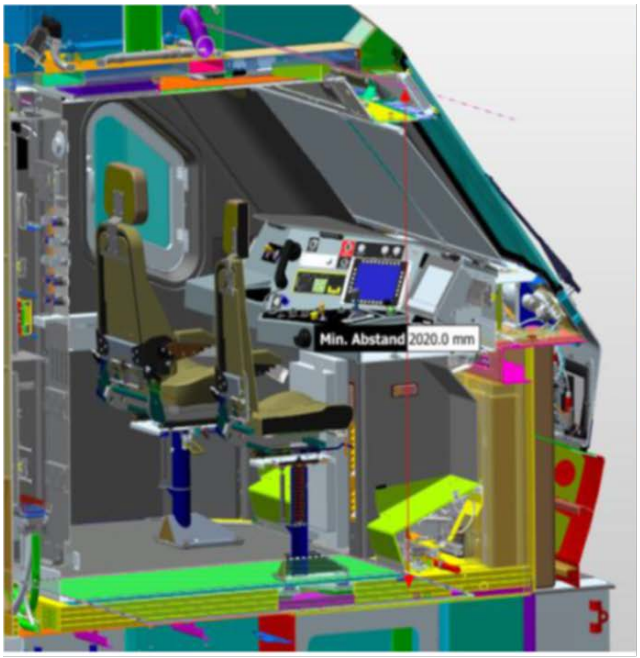

Illustration of locomotive cab design.

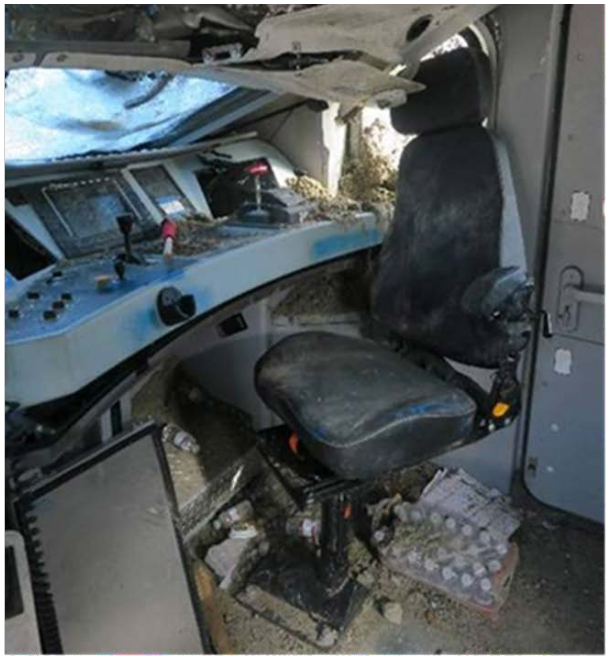

Photograph of damaged locomotive cab.

Figure 19. Pictures of the cab design and cab damage. (Photograph courtesy of Siemens.)

1.12.2 Passenger Car Survival Factors

The exterior passenger door is 32-inches wide and when opened, automatic retractable steps extend to provide passengers with a means of stepping down from the train. These steps are located 16 inches above the top of the rail. Each service railcar is equipped with a hinged exterior access door for service personnel. This service door has an opening of 31 inches.

Each passenger railcar and the bistro and dining railcar are equipped with four emergency windows which can be accessed from the exterior by first responders or removed from the inside by passengers. These windows are comprised of double-paned laminated safety glass and marked for emergency egress. The remaining side windows are double-paned laminated glass that cannot be used for emergency egress. Window openings are about 53-inches wide and 29-inches tall.

The railcars are equipped with an internal glass door fitted with tempered safety glass that is located at either end of the railcar. The door is electrically powered. When the electrical power is removed, 20 pounds of force is required to manually open the door. In addition, at each end of the railcar, a small hammer is provided for passengers to use to break the door glass in the event the door fails to open.

The coaches are equipped with nine rows of double seats on each side of the aisleway. The first three rows and last row of seats do not rotate. Tables are provided for the seats located at the one end of the railcar. The business class has eight rows of double seats on one side of the aisle and a single seat in the last row. In business class, the first and last row of seats do not rotate. On the opposite side of the aisleway, there are nine rows of single seats. (See figures 20 and 21.)

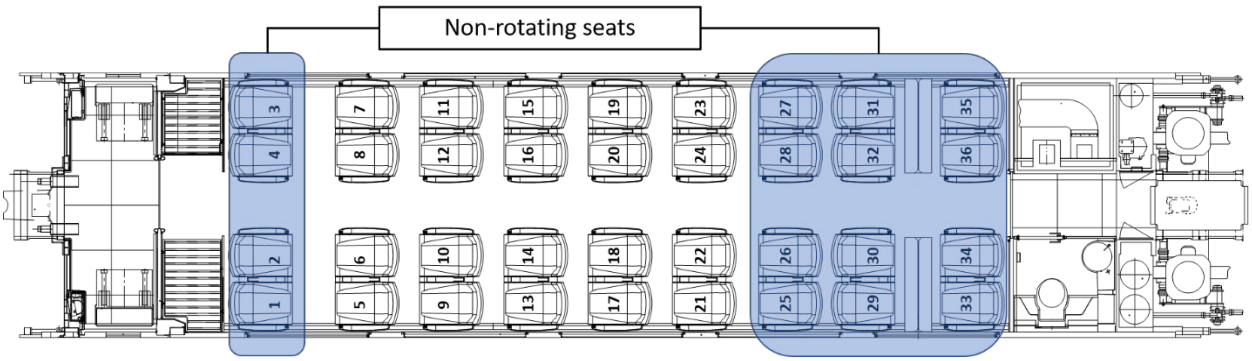

Figure 20. Talgo coach class seating layout.

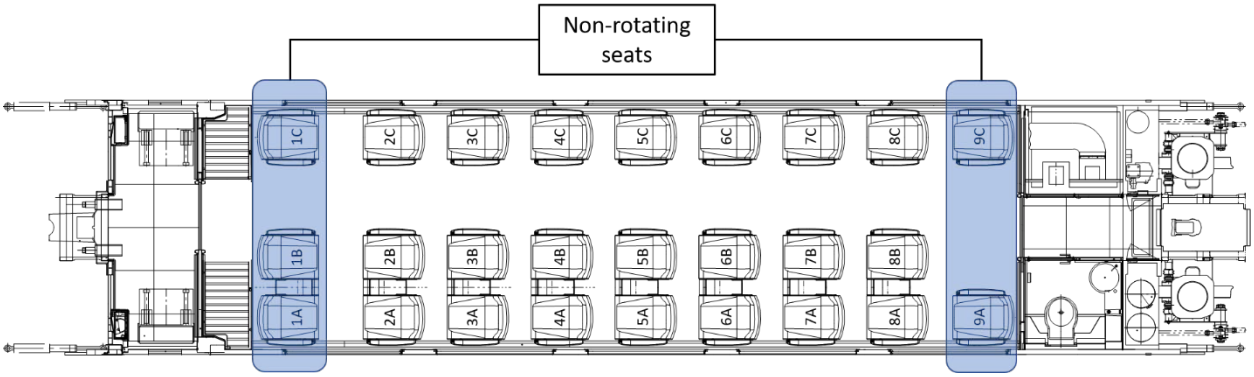

Figure 21. Talgo business class seating layout.

Both wheelchair-accessible railcars have a single seat with the adjacent space available for a wheelchair-bound passenger, five rows of double seats and a single seat in the last row on one side of the aisleway. The other side of the aisleway has a space designated for a wheelchair bound passenger, and five rows of single seats. Wheelchair accessible railcars have two wheelchair lifts mounted to the frame of the railcar adjacent to the two exterior loading doors. (See figures 22 and 23.)

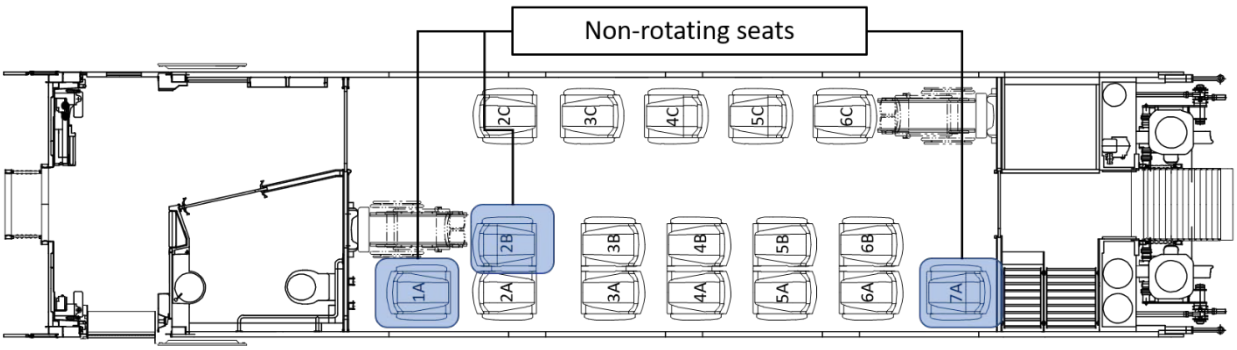

Figure 22. Coach class Americans with Disabilities Act (ADA) layout.

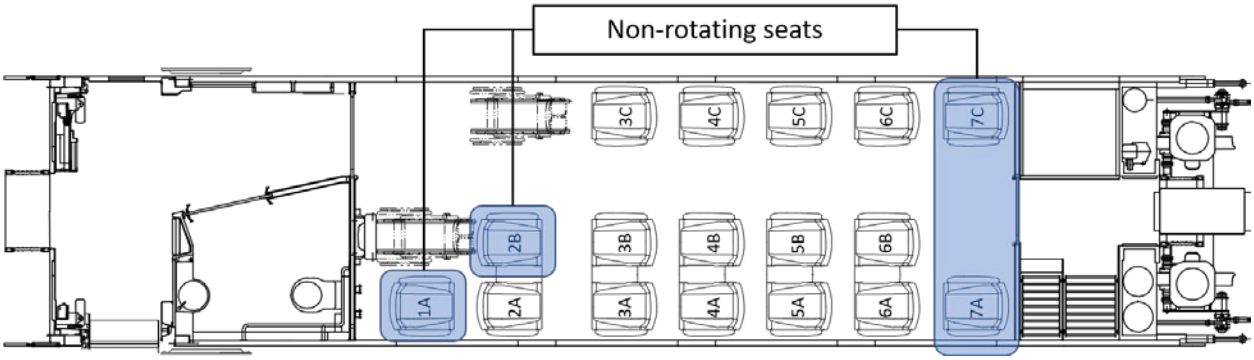

Figure 23. Business class Americans with Disabilities Act (ADA) layout.

There are two nonrevenue railcars, a dining railcar and a bistro railcar. The dining railcar has a capacity for 30 diners. There are ten tables present in this railcar. Five of the tables will accommodate four diners and the remaining five accommodate two diners each. The bistro railcar has a long counter-type surface that permits seven passengers to sit on stools in a "bar-like" atmosphere. There are also two small tables located to the rear and opposite side of the railcar. The bistro railcar also incorporates a kitchen area with a large sink, multiple ovens, and two work station tables.

1.12.3 Postaccident Observations of Passenger Railcar Interiors

Investigators examined and assessed passenger interior damage resulting from the derailment with an emphasis placed on the loss of survivable occupant space and interior features that may have contributed to survivability within the railcar. The results of the observations are shown in table 5.

Table 5. Postaccident observations of passenger railcar interiors.

Car	Interior Observations
AMTK 7454 (3)	Minor damage. Interior intact. No loss of survivable occupant space.
AMTK 7554 (4)	Right side wheelchair lift was partially detached from railcar structure. Minor damage to left side wheelchair lift. Seat 4C on left side of railcar at point of deformation rotated towards aisleway. Ceiling panels displaced and deformation above Seat 4C. Glass divider for overhead luggage bin broken and found on floor. Minor damage to seat components (trays and cushions). No loss of occupant space.
AMTK 7804 (5)	Right side interior ceiling collapsed. Right side tables and seats broken. Glass partitions between seating positions are broken on both sides of railcar. Seats shifted and deformed. Survivable occupant space present.
AMTK 7303 (6)	Significant amounts of dirt and debris found inside of railcar. Partial collapse of overhead ceiling. Front emergency window frame and railcar bowed inward on right side. Wall mounted cabinet and counter displaced. Extensive damage to seating area. Survivable occupant space available.
AMTK 7504 (7)	Extensive damage caused by separation of both wheelchair lifts from railcar body. Length of railcar shortened 4 feet, floor deformation at highest point 29.5 inches, roof collapse shortened height to 20 inches and compromised seats #17/18. Seat rotation, floor rise, and ceiling collapsed eliminated survival space except at seats #21, 22 and 25. 60 percent of seats lost to crushing.
AMTK 7424 (8)	Roof and luggage rack collapse reducing overhead space. Survival occupant space maintained at seats # 21 through 33.
AMTK 7423 (9)	Last three rows of double seats rotated due to deformation to lower right sidewall. Right rear emergency window smashed due to impact with seat occupant. Rear glass partition behind last row of seats right side broken. Survivable occupant space available.
AMTK 7422 (10)	Right side on fourth row, double seat (#21/22) rotated. No loss of survivable occupant space.
AMTK 7421 (11)	Table located on right side between first and second row of double seats broken due to penetration of railcar structure. Seat # 21/22 located four rows back on the right side found rotated. No effect on available occupant space.
AMTK 7420 (12)	Minor damage. No loss of survivable occupant space.

1.13 Injuries

1.13.1 Locomotive

The locomotive engineer sustained blunt impact trauma to the head, facial fractures from impact with the interior structures that collapsed due to the impact with the trees and a fractured right elbow from impact with the console. The qualifying conductor, who was riding in the locomotive cab, sustained injuries to his lower extremities, back and spinal injuries and blunt impact trauma to his torso.

1.13.2 Passenger Railcars

An assessment was conducted to the interior compartments based on the injuries sustained by the passengers and the damage to the railcars. Investigators were able to obtain the majority of the medical records for the injured passengers. Through interviews, the passengers provided their railcar and seat locations and an overview of the events that occurred in the passenger railcars. Ten passengers were either fully or partially ejected from the train during the derailment. Table 6 summarizes this information.

Table 6. Breakdown of car occupant injuries.

Railcar Number	Car Occupants	Fatal	Serious Injury	Minor Injury	No Injury	*Unknown Injury	Ejection	Partial Ejection
AMTK 7454 (3)	3	0	1[a]	0	2	0	0	0
AMTK 7554 (4)	6	0	4	0	1	1	0	0
AMTK 7804 (5)	3	0	0	1	1[a]	1	0	0
AMTK 7303 (6)	2	0	1[a]	0	1	0	0	0
AMTK 7504 (7)	11	3	6	1	0	1	2	2
AMTK 7424 (8)	10	0	7	1	2	0	5	0
AMTK 7423 (9)	7	0	2	2	1	2	0	0
AMTK 7422 (10)	10	0	1	1	8	0	0	0
AMTK 7421 (11)	21	0	6	2	12	1	0	1
AMTK 7420 (12)	1	0	0	1[a]	0	0	0	0
Location unknown	7	0	2	1	3	1	0	0
Totals	81	3	30	10	31	7	7	3

***** Investigators were unable to obtain the medical records for these individuals.
[a] Includes crew member.

1.13.3 Highway Vehicles

Southbound I-5 in DuPont, Washington, is a heavily traveled major arterial roadway that traverses the state of Washington north and south. It is the main thoroughfare between two of the state's largest cities, Seattle and Tacoma.

The derailing Amtrak train struck several highway vehicles after it departed the right of way and entered the roadway. Additionally, parts of the train detached during the derailment and were involved in collisions with several vehicles on the Interstate. In all, eight vehicles were damaged resulting either from the collision with the derailing train or from detached train components or debris. In addition to the eight vehicle operators, there were two passengers traveling in the involved vehicles. A total of eight vehicle occupants were injured.

1.13.4 Highway Vehicle Accident Sequence

At 7:33 a.m., a Freightliner tractor in combination with an intermodal trailer was traveling at 61 mph southbound on I-5 as recorded by the truck's Electronic Logging Device (ELD). In his interview with investigators, the truck driver said he was in the "center" lane. The truck driver

advised that about 3-4 miles before the accident, the train while traveling on the track, passed him on his right. The truck driver reports that he observed the entire train pass his truck which was traveling about 61 mph southbound on the interstate. As the truck driver approached the overpass, he said he observed AMTK 7424 (8) enter the roadway north of the overpass and strike his trailer. The railcar was already sliding on its roof when it entered the roadway. The impact from the railcar damaged the steel intermodal trailer and pushed the truck out of its original lane of travel. As the railcar was dragged along the side of the trailer, it slowed the Freightliner to 23 mph.

The ELD recorded the time of the deceleration at 7:34 a.m. As the truck continued southward, passing under the overpass, it was struck by the power railcar, AMTK 7903 (2) that had entered the roadway just south of the overpass. The Freightliner came to final rest near the right side of the roadway. The truck sustained heavy damage to the cab, windshield, the engine and the engine cowling. Because of the damage sustained by the truck cab, the truck driver's door became wedged and the truck driver was forced to climb out of the passenger window. The driver sustained minor injuries in the collision and required medical attention.

A Ford F-150 pick-up truck was damaged when AMTK 7454 (3) entered the roadway south of the overpass in front of it. The driver reported that he was unable to stop and struck the railcar. AMTK 7424 (8) collided with the rear of the truck as it slid to a stop on the interstate. The driver sustained severe injuries as did the front-seat passenger, who was trapped in the vehicle and had to be extricated by the first responders. (See figure 24.)

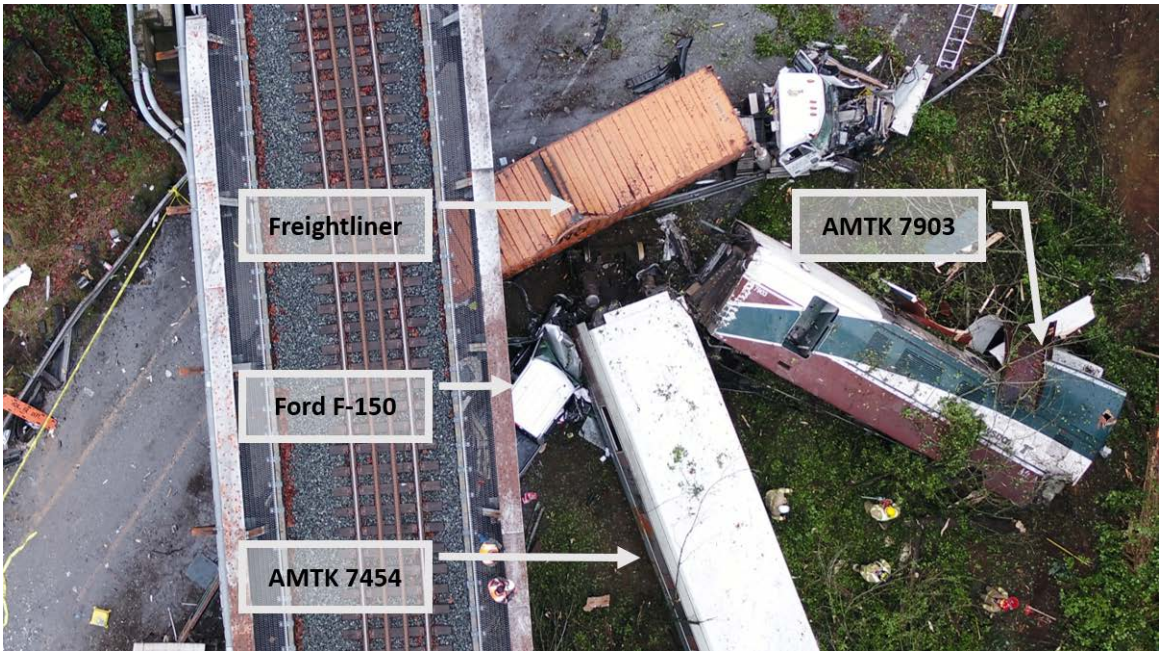

Figure 24. Final resting position of F150 and Freightliner. (Photo provided by WSP.)

A white Toyota RAV4 was traveling south in the right lane when the driver reported seeing debris flying along the right side of the interstate. The driver advised that it was at that point that her vehicle was struck from behind. The driver lost control of the Toyota which spun out of control crossing all the southbound travel lanes of the interstate. The vehicle came to final rest on the left

side of the roadway, facing north in the southbound lane. The subsequent investigation revealed that the Toyota RAV4 was struck from behind by the lead locomotive as it entered the roadway and slid to a stop on the interstate. The driver was treated for minor injuries at a local area hospital.

A green Kia Soul (Kia) and a black Jeep Grand Cherokee (Jeep) were struck by the rolling assembly weighing about 4,500 pounds that had detached from AMTK 7424 (8). (See figure 25.) The rolling assembly struck the front hood of the Kia and the rear of the Jeep; causing both drivers to lose control of their vehicles. The driver of the Jeep reported to investigators that AMTK 7424 (8) also struck his vehicle. Both vehicles sustained extensive crush damage resulting from the impact with the rolling assembly. The driver of the Kia was pinned inside of her vehicle when the engine block was shoved rearward, collapsing the dashboard and steering column onto her. (See figure 26.) The driver had to be extricated by first responders but sustained only minor injuries in the accident. After being struck by the rolling assembly, the Jeep rotated 180° striking the metal guardrail before coming to final rest. (See figure 27.) The Jeep occupant also sustained minor injuries in the accident.

Figure 25. Detached rolling assembly and Grand Cherokee. (Photo provided by WSP.)

Figure 26. Green Kia and rolling assembly on I-5. (Photo provided by WSP.)

Figure 27. Damaged Jeep Grand Cherokee. (Photo provided by WSP.)

As a result of the accidents with the highway vehicles, eight people were injured in the highway vehicles. Table 7 describes the injuries in detail.

Table 7. Highway vehicle injury breakdown.

Vehicle	Damage	Occupants	Injured	Fatal	Serious	Minor
Ford F-150	Extensive	2	2	0	2	0
Freightliner tractor and trailer	Extensive	1	1	0	0	1
Kia Soul	Extensive	1	1	0	0	1
Jeep Grand Cherokee	Extensive	2	2	0	0	2
Kenworth tractor and trailer	Moderate	1	0	0	0	0
Nissan Altima	Moderate	1	0	0	0	1
Toyota RAV4	Extensive	1	0	0	0	0
Hyundai Santa Fe'	Extensive	1	0	0	0	0

1.13.5 Passenger Ejections

During the derailment, AMTK 7424 (8) detached from its leading and trailing railcar and struck the overpass concrete bridge abutment. The railcar then nosed downward, upended and overturned end over end while rotating 180°, finally resting on its roof while sliding to a stop on I-5 under the overpass. During the accident sequence, the structural supports that held the windows in place buckled and several of the windows broke out or fell out. Five passengers inside of the railcar were ejected out of the railcar and were, according to emergency responders, motorists and other passengers, found lying on the interstate.

As a result of the derailment, AMTK 7421(11) came to rest hanging from the overpass and resting on top of AMTK 7424 (8). (See figure 28.)

Figure 28. AMTK 7421 (11) resting on AMTK 7424 (8). (Photo provided by WSP.)

The separation of AMTK 7421 (11) from its lead railcar left an opening at the lowest point of the railcar, where it had been previously coupled. A female passenger sitting near the front of that railcar was thrown from her seat and partially ejected through the opening at the end of the railcar. (See figure 29.)

Figure 29. Open end of AMTK 7421 (11). (Photo provided by WSP.)

Two of the deceased passengers were ejected out of AMTK 7504 (7) when the side wall of the railcar was breached by the rolling assembly belonging to AMTK 7422 (10). The rolling assembly tore a hole into the underside of the railcar as it flipped over onto its right side during the derailment. The rolling assembly was found inside of the railcar. In addition, two more passengers were partially ejected out of the opening created by the railcar's structural breach. Another passenger was fatally injured when he was struck by the rolling assembly inside of the railcar.

In total there were seven full train passenger ejections and three partial ejections.

1.13.6 Occupant Space Design and Safety of Railcars

During this derailment, the rail passengers experienced both forward and lateral forces. Several passengers sustained serious head and torso injuries during the derailment. A secondary collision occurs when the train occupants continue moving at the train's initial speed while the train rapidly decelerates. The impact occurs when an occupant collides with an interior surface, such as the seatback in the row ahead. An occupant will survive a collision with an interior surface (such as a seat back, wall, or table) during an accident if the forces and accelerations are within acceptable human tolerance levels.

Train 501 is not equipped with "occupant restraint systems" used in other forms of passenger transportation such as seatbelts or airbags, nor are there any such requirements for passenger railcars. These common forms of occupant restraint are found in the airline industry and in passenger vehicles but not in passenger trains. The primary strategy for occupant protection in passenger trains is "compartmentalization." This strategy involves attempting to restrict the movement of the occupants during a railroad accident to limit the potential for injury.

1.13.6.1 Passenger Seating

Some of the seats in the Talgo Series VI train are designed to rotate which can decrease the effectiveness of compartmentalization when the seats rotate during an accident. (See figure 30.) In this derailment, investigators observed several seats that had rotated with passengers causing injury. To understand the nature of the injuries and why the seat rotation occurred, NTSB investigators examined the design.

The release mechanism, located under the side of seat at the aisle, can be manipulated by a crewmember by stepping on the latch. The row of seats can be rotated around and locked back into position. The rotation of the seats is accomplished by turning the seats starting at one end of the railcar and working to the other end. Once the seat has been rotated into place, the locking mechanism must be engaged to lock the seat into position and prevent inadvertent rotation.

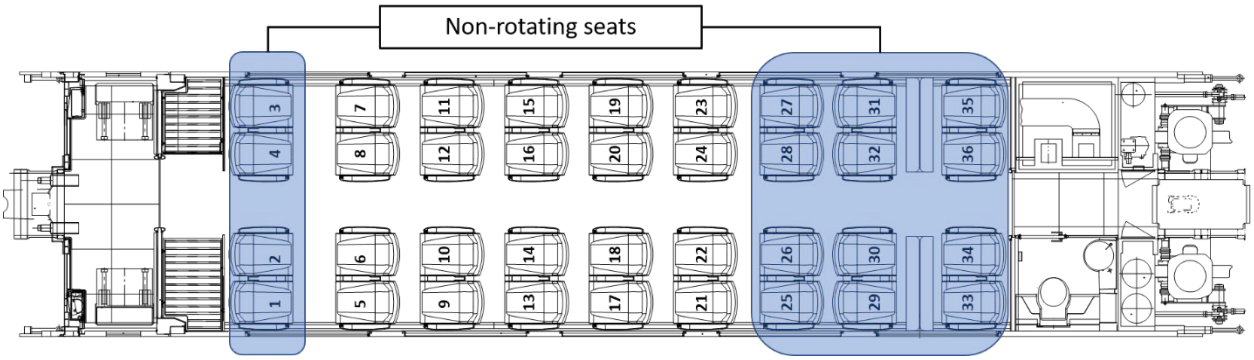

Figure 30. Coach class seating layout showing rotating and nonrotating seats.

Postaccident interviews revealed that several passengers in AMTK 7423 (9) were injured when three rows of seats started to rotate. One passenger was struck in the head with enough force to shatter the window. The seat corner of seat 2, which is not designed to rotate, contacted the rear bulkhead of the railcar, shattering the glass partition, directly behind the seat. A postaccident

examination of AMTK 7423 (9) revealed that during the derailment, the metal railing on the southside walkway on the overpass penetrated the lower portion of the railcar's sidewall. This resulted in the displacement of the interior sidewall. The three rows of seats were displaced laterally causing the seats to rotate. Figure 31 shows the intrusion by the metal railing into the railcar and shows the displacement of seats.

Figure 31. Bridge railing penetrating AMTK 7423 and displaced passenger seats.

A passenger in AMTK 7422 (10) reported that a row of seats started to rotate during the derailment. This railcar sustained only minor exterior damage and no interior damage. The seats were identified as 21/22 and examined. The locking mechanism was found in working order and no obvious defects could be found. The locking mechanism appeared not to have been engaged. No passenger injuries were associated with the rotation of the seat in this railcar. Seats 1A and 1B (nonrotating type) were twisted from the normal positions and seat 4C had rotated in AMTK 7554 (4). Although not engaged when investigators examined the locking mechanism from 4C, no defects were found.

1.13.6.2 Infant and Child Seating

As discussed above in section 1.13.6, restricting the fore and aft movement or compartmentalizing a passenger involved in an accident is effective in minimizing injuries. Currently there are no features in passenger railcars that allow a parent to secure their child safety seat (car seat). In this accident, a family carrying a car seat with an infant boarded train 501 and sat in AMTK 7421 (11). The parents reported that they were unaware that the train would not have securement straps necessary to belt the car seat into one of the seats in the railcar. Subsequently, the car seat containing the child was placed on top of a table during the journey. Just prior to the derailment; the father reported that he removed the child from the car seat and entered the lavatory. The car seat was left on top of the table. During the derailment, the unrestrained car seat was ejected out of AMTK 7421 (11). The car seat was recovered outside near AMTK 7424 (8) near a disconnected rolling assembly. (See figure 32.)

Figure 32. Child car seat near AMTK 7424 (8). (Photo provided by the Federal Bureau of Investigation.)

Amtrak's policy for the transportation of minors aboard their trains is that a child under 2 years of age and riding for free can use an available seat if it is not needed for a paying passenger. If no seat is available, the child is assumed to be carried on the lap of the paying adult. No safety provisions are made for smaller children, even if they pay for a seat.

1.13.7 Handicap Accessibility

Train 501 was equipped with two handicap-accessible railcars. One was the Business class, AMTK 7554 (4) and one was the Coach class, AMTK 7504 (7). Two wheelchair lifts were provided in each railcar, one on each side of the railcar adjacent to the exterior door. In the stowed position, the lifts were secured by a metal pin that bolted the wheelchair assembly to the overhead frame of the lift and to the floor of the railcar. In AMTK 7554 (4), the right-side wheelchair lift was found to be detached from its securement bracket on the floor and pulled away from the top by a force exerted on the bottom of the lift at the time of the derailment. The wheelchair lift was found partially attached and hanging, obstructing access to the exterior door. On the left side of the railcar, the wheelchair lift was still in place. The lift had sustained damage and the securement latch had been bent but the lift was still functional. A closer inspection of the wheelchair lift assemblies revealed that the structural buckling of the railcar frame allowed the wheelchair lifts to be detached from the floor. The weight of the wheelchair lift pulled the top of the lift away from the railcar structure. (See figure 33.)

Figure 33. Exemplar wheelchair lift and damaged lift in AMTK 7554 (4).

A postaccident inspection of AMTK 7504 (7) revealed that both wheelchair lifts were missing. Both had broken away from their securement bracket attached to the end of the railcar. The right-side wheelchair lift, after detaching from the railcar structure, was propelled through the interior of the railcar and breached the exterior wall of the lavatory. After detaching from the railcar's structural support, the left-side wheelchair lift was propelled to the right and toward the opposite door at the end of the railcar.

Only one wheelchair lift was recovered from the scene. Components from the second lift were recovered. Due to the extensive damage to the railcar and to the recovered wheelchair lift, it was not possible to determine which wheelchair lift had been recovered from the debris. Figure 34 shows the interior damage to AMTK 7504 (7) and the location where the wheelchair lifts were mounted prior to being torn away from the railcar structure.

Figure 34. Photograph of missing wheelchair lift and damage to AMTK 7504 (7).

Figure 35 shows the damage resulting from the right-side wheelchair lift being propelled into the exterior lavatory wall in the railcar.

Figure 35. Photograph of the interior lavatory damage of AMTK 7504 (7).

1.13.8 Interior Glass

The Talgo Series VI railcars are equipped with internal glass doors fitted with tempered safety glass at the end of each railcar that separates the vestibule from the interior of the passenger compartment. The doors slide into place on a runner behind or in front of the last row of seats in each railcar. The door is electrically powered. When the electrical power is removed, 20 pounds of force is required to manually open the door. A glass partition is also located at one end of each railcar. A small utility hammer is provided for passengers to use to break the glass door in the event of an emergency. The sign notifying passengers of the presence of the hammer and the intended use is not photoluminescent and would not be visible in low or no-light conditions.

Investigators noted the vestibule door in AMTK 7422 (10) was jammed during postaccident interior examinations. Reasonable attempts were made by investigators to open the door, but it did not move. The utility hammer remained in place. (See figure 36.)

Figure 36. Jammed vestibule door, AMTK 7422 (10).

Despite being fitted with safety glass, several of these doors shattered during the derailment. In AMTK 7421 (11), the door shattered just behind two seated passengers in the front row of the railcar. In addition to the glass interior doors, glass partitions are also incorporated into the seating interior design for the dining and bistro railcars. These partitions are used to separate seating positions and are located directly behind the head of the passenger. Several of these partitions shattered during the derailment.

In the overhead luggage bin area, glass dividers are used to partition the space. Several broken dividers were found on the floor of the railcars during the postaccident inspection.

1.13.9 Emergency Egress – Lighting and Signage

Current requirements for passenger railcar emergency lighting are outlined in 49 *CFR* 238.115, "Emergency Lighting." The final rule for emergency lighting was established in November 2013.

Title 49 *CFR* 238.115 (a) (1-4) requires that equipment ordered on or after September 8, 2000, or placed into service for the first time on or after September 9, 2002, have batteries for a backup power system. However, this equipment was built before the year 2000. The Talgo trainset is required to comply with 49 *CFR* 238.115 (b)(1-2) that states the equipment should comply with APTA standard PR-E-S-013-99, Rev. 1, "Standard for Emergency Lighting System Design for Passenger Cars," that requires railcars to have emergency lighting, "powered from either the main battery system, or independent power source(s). Each emergency light fixture shall activate automatically or be energized continuously for 90 minutes whenever the car is in passenger service and normal lighting is not available."

The final rule stipulates that no later than December 31, 2015, at least 70 percent of each railroad's passenger railcars that were ordered prior to September 8, 2000, and placed in service prior to September 9, 2002, comply with the emergency lighting requirements.

In December 2015, Amtrak petitioned the FRA seeking a temporary waiver of compliance for the emergency lighting requirements until December 2017. The justification was based on the fact that 70 percent of Amtrak's fleet was placed into service prior to 2002, thus needing modification. The trains required a waiver because they did not meet the requirements of 49 *CFR* 238.203 or the end strength. In April 2016, the FRA denied the request in the interest of public safety.

According to passengers and emergency responders, the separation of the railcars resulted in the loss of lighting that hampered both the passengers' ability to evacuate from the train and the first responders' rescue operation. In this Talgo train, the batteries are in the power railcar in the front of the train and the baggage railcar in the rear of the train. Auxiliary batteries are not provided for the individual railcars.

After the derailment, most passengers self-extricated. The inability of the crew to communicate with the passengers resulted in the passengers having to decide on their own initiative whether to evacuate and to determine the safest route of evacuation. Most of the passengers reported that they had no contact with the crew after the derailment. The public address (PA) system, which is available on the train, would not have been operational because the train came apart in this derailment.

This system is normally hard wired and dependent on the train's electrical system and not wireless. Once the railcars detached, the entire train lost both power and signal for the PA system.

Current requirements for passenger railcar markings and instructions for emergency egress and rescue access are outlined in 49 *CFR* 238.125, "Marking and Instructions for Emergency Egress and Rescue Access."[33] Specifically, the rule enhances requirements related to the use of high performance photoluminescent (HPPL) material, such as a photoluminescent material that is capable of emitting light at a very high rate and for an extended period of time, as well as policies and procedures for ensuring proper placement and testing of photoluminescent materials. These

[33] The rule states that, on or after January 28, 2015, emergency signage and markings shall be provided for each passenger railcar in accordance with the minimum requirements specified in APTA PR-PS-S-002-98, Rev. 3, "Standard for Emergency Signage for Egress/Access of Passenger Rail Equipment," Authorized October 7, 2007, or an alternative standard providing at least an equivalent level of safety, if approved by FRA pursuant to section 238.21.

revisions are intended to help ensure greater visibility of signage and markings in an emergency situation so that train occupants can identify emergency exits and the path to the nearest exit in conditions of limited visibility, which include, but are not limited to conditions when all lighting fails, or when smoke is present in the passenger railcar.

Existing emergency egress signage inside some passenger compartment areas within passenger railcars has been ineffective due to its inability to absorb sufficient levels of ambient or electrical light. The requirements in this rule improve the conspicuity of signage and markings in the passenger compartment, and thus increase the discernibility of the exit signs and markings.

About 2 years before the derailment, Amtrak performed an internal audit of its inventory for compliance with federal regulations. At that time, Amtrak identified several problems with their fleet in general and the Talgo trainsets specifically. During testing for emergency lighting requirements, Amtrak discovered that the signage in the Talgo railcars lacked the required photoluminescence for instructional signs for the operation of emergency door, emergency exit signs, and instructional signs for doors and windows. Amtrak also noted that the Talgo trainsets did not comply with the federal regulations regarding emergency lighting in the railcar aisles and passageways during low-light and no-light operations. Amtrak presented its findings to the local Talgo representative.

Talgo started a project on the Talgo Series VI trainsets to:

- Replace the emergency door opening instruction signs with ones compliant with the current HPPL requirement
- Replace the retroreflective border around the manual release levers and handles with compliant HPPL material
- Increase the illumination in the vestibule to assure the above material is sufficiently charged

In January 2019, Talgo had completed replacing the signs. However, the additional work to upgrade the emergency lighting is still ongoing as of the date of this report.

1.13.10 Emergency Doors

The instructions to operate the door are located on the bulkhead above the manual release lever. It provides step-by-step instructions to the passenger on how to open the emergency door to evacuate the train. Because the process to open the doors is not intuitive, instructions are required to be placarded.

The instructions advise the user to:

- Press a green button (some signs indicate to wait 5 seconds before going to next step). When the main or auxiliary power is available, the door will usually slide open which alleviates the need to proceed further with the instructions.

- (In the event that the door fails to open), pull the red lever. It is made to operate in the either up or down position.

- Pull up on handle. The handle releases the mechanism that is holding the door in place.

There was a pictorial and instructions to use two hands to push out and sideways to slide the door open. During the postaccident inspection of the railcars, all the placards were found to be in place.

However, none of the placards possessed any photoluminescence, which means that in low or no-light situations, the signs cannot be seen by passengers attempting to use the door for egress in an emergency.

At the end of each railcar in the vestibule area are two exterior doors that provide emergency egress. During normal train operation (under power), the train's electrical system releases the door and allows the door to be opened. Under emergency power, the train's electrical system still provides some electrical power to operate the door. In the event that the door does not automatically open, the electrical system can provide some assistance to allow the ease of opening the door manually.

During the loss of all electrical power, including emergency auxiliary power, the door operation is manual only. A loss of the electrical power assist can occur whenever the railcars become detached such as in a collision or derailment. The exterior door is of substantial weight and even some adults will have difficulty pushing the door open.

During the postaccident inspection, several undamaged doors were selected at random and opened. Whereas all the doors could be opened, several issues did arise. In one instance, the red lever only worked in the up position, though it was designed to work by either pulling down or pushing up to release the manual pull handle. Talgo committed to revising its maintenance procedure to assure both directions will perform as intended.

Another issue found with the lever involved the wire ties Talgo used to secure the lever to prevent accidental or deliberate tampering. In one case, the wire tie increased the difficulty in actuating the lever. Investigators had to use both hands and lean against the handle with their full weight to break the wire and move the lever.

It should be noted that when investigators examined an exemplar undamaged trainset on March 7, 2018, at the maintenance facility in Seattle, Washington, similar issues with the tampering device hampering door use were found when trying to operate the door release mechanism. The issue was communicated to Amtrak and Talgo who committed to look at possible improvement. Talgo advised investigators that it is researching alternatives.

In AMTK 7423 (9), two passengers reported that they had attempted to exit the train after the derailment but could not get either of the exterior doors to open. An examination of the railcar revealed that evidence was present to indicate that someone had attempted to open the door, it was clear that not all the proper steps to open the door were performed. The instructional placard was

present but did not possess the required photoluminescence by regulation. The derailment occurred prior to sunrise. (See figure 37.)

Figure 37. Exemplar emergency door showing instruction placard.

1.13.11 Emergency Windows

Several undamaged windows were found both inside and outside of the railcars. Window zip strips were also found inside of several railcars indicating that the emergency windows were used for egress after the derailment.[34]

The exterior windows on each railcar had been marked with a decal indicating the proper way to use the window in an emergency. The railcar windows were found to function as designed. However, several of the passengers, bystanders, and members of the fire department reported that the multiple window markings were confusing. The instruction provided to gain access through one window was not the same as the instructions provided to gain access to the adjacent window. In several instances, individuals were attempting to gain access through a window incorrectly, delaying access to the interior of the railcar and the rescue effort.

[34] A *zip strip* is a removal gasket that when pulled allows for the rapid removal of a train car window in an emergency.

Figure 38 illustrates the decals found on the exterior of the railcar near windows on the Talgo railcars. Instructions to correctly gain access are for the side passenger windows only. Figures 38 and 39 also show the instructions for the emergency windows located at the first and last windows on each side of the railcars.

Figure 38. Interior emergency window removal instructions.

Figure 39. Interior emergency window removal instructions.

1.14 Emergency Response

The derailment occurred in Pierce County, Washington, about 3 miles north of Thurston County. The location was adjacent to JBLM which has concurrent emergency response jurisdiction with Pierce County.

1.14.1 Pierce County Emergency Management Agency

The Pierce County Emergency Management Agency (EMA) is a governmental agency that responds to all types of hazards, emergency situations, and disasters. The agency's mission is to

prevent, mitigate, respond, and recover from these incidents that occur within Pierce County. The Pierce County EMA is accredited by the Emergency Management Accreditation Program, with the most recent reaccreditation occurring in 2016. The agency is comprised of six divisions: Operations, Communications, Preparedness, the Fire Prevention Bureau, the county's Emergency Medical Certification and Recertification programs, and the Washington State Search and Rescue Task Force. The agency communications centers operate on a 700 megahertz (MHz) radio frequency. Pierce County EMA writes plans and conducts training including mass casualty incidents. The agency participates in training seminars and live drills sponsored by Amtrak. In addition to training, the agency takes part in regional meetings with other emergency management agencies.

On the morning of the derailment, the Pierce County EMA deputy director was notified of the derailment about 10 minutes after it occurred and immediately activated its Emergency Operations Center. The agency also ensured that Family Assistance Centers were available to provide support to the victims and their families during the response.

1.14.2 Fire/Rescue and EMS Response

At the accident location (which was adjacent to the JBLM base), JBLM entered into an agreement providing emergency response services to the Pierce County Department of Emergency Management. In this shared jurisdiction, JBLM emergency responders conducted operations in accordance with the Pierce County Emergency Management Plan, and the Mass Casualty Incident (MCI) protocol.[35] The protocols outline the treatment and transportation of patients, hospital protocols, on-scene operations, accountability, and communications. JBLM staff are certified to operate under the direction of the Washington State Medical Director, and the Medical Director for the United States Department of Defense (DOD).

On the day of the derailment, JBLM dispatched all six engine companies to the scene at 7:37 a.m. The time of the accident corresponded with the normal duty shift change at the fire department, which resulted in two shifts of firefighter/emergency medical technicians (a total of 84 firefighters) available to respond to the derailment. In addition to the JBLM engine companies, three JBLM chief officers responded to the scene. The responding command officers included the assistant chief who assumed the role of the incident commander, an operations chief, and a chief officer who acted as the medical safety officer for the response.

The JBLM incident commander requested a mutual aid response and the request was forwarded to Thurston County. The assistant chief for the Lacey Fire Department, a department in Thurston County, reports that the mutual aid call was received by his agency as a Level 1 MCI. The assistant chief advised that given the information he received regarding the nature of the accident, he upgraded the Thurston County response to an MCI Level 2. This resulted in the response of 45 units with about 100 firefighters to the derailment (which was in Pierce County). The Lacey Fire Department assistant chief stated that his goal was to have more units on the way to the accident site to minimize the delay in obtaining resources. The decision on whether these

[35] An MCI Level 1 incident involves between 5-10 people and required local resources and responding agencies. An MCI Level 2 incident involves between 10-20 people, requires local resources and responding agencies, and may require additional resources from other jurisdictions within the region.

units would be necessary was to be made at the scene, after conferring with the incident commander. The overwhelming number of resources provided by Thurston County resulted in Pierce County units not being deployed, despite their availability and proximity to the scene.

Fire/Rescue and emergency medical technician resources were provided by the DuPont Fire Department, the West Pierce Fire Department, the Lacey Fire Department, the Olympia Fire Department, the Tumwater Fire Department, the Gig Harbor Fire Department, the Central Pierce Fire Department, and the South Bay Fire Department. Transport ambulances were provided by the county fire departments, and local contractors; American Medical Response, Inc. (AMR) and Faulk ambulance services, and Madigan Army Medical Center.

The victims of the derailment were transported to various hospitals both in Pierce County and Thurston County. Some of the victims were transferred to specialized treatment facilities. Table 8 outlines the distribution of victims to the various medical treatment facilities.

Table 8. Distribution of victims to medical facilities.

Hospital	Location	Trauma Designation	Patients
Madigan Army Medical Center	DuPont	II	16
Providence St. Peter Hospital	Olympia	IV	9
Good Samaritan	Puyallup	III	13
MultiCare Allenmore Hospital	Tacoma	II	5
St. Joseph Medical Center	Tacoma	II	11
Harborview Medical Center	Seattle	I	*4
Capitol Medical Center	Olympia	IV	7
Tacoma General Hospital	Tacoma	II	3
*Transferred to hospital from other facilities.			

1.14.3 Law Enforcement Response

The primary law enforcement agency in Pierce County is the Pierce County Sheriff's Department. The closest law enforcement agency adjacent to the derailment site was the Lakewood City Police Department. Communications for these and other agencies within Pierce County are provided by the Emergency Communications Center, known as South Sound 911. WSP has primary jurisdiction on I-5. The Washington State Police (WSP) and other agencies in Thurston County come under the Thurston County Emergency Communications Center known as TComm911.

The recorded time of the derailment was 7:33 a.m. The first eyewitness call reporting the derailment was received by the South Sound 911 Communications Center at 7:36 a.m. The WSP received its first 911 call at 7:38 a.m. The eyewitness reported that he called 911 and his call was routed to the Thurston County Emergency Communications Center. The dispatcher then rerouted the call to the South Sound 911 Communications Center for Pierce County. Once connected with an emergency call taker at South Sound 911, the eyewitness was advised that the center had already received multiple calls reporting the derailment. Table 9 shows the timeline of the calls.

Table 9. Emergency response timeline.

Time	Response
7:36:10	First call received by South Sound 911 Emergency Communications Center
7:37:05	Call dispatched to DuPont Police Department (DuPD)
7:37:17	Call dispatched to Steilacoom Police Department (SMPD)
7:37	JBLM Emergency Communications Center notified of derailment
7:38	WSP dispatched to scene.
7:38:30	Lakewood City Police Department (LPD) dispatched to scene.
7:40:30	DuPD arrives on the scene.
7:40:35	Thurston County notified
7:41:54	Thurston County Fire Department responding to the scene. Thurston County law enforcement also requested to respond.
7:44:47	Pierce County Sheriff's Department (PCSD) dispatched.
7:48:12	SMPD arrives on scene.
7:56:08	DuPont Police Chief assumes command of incident.
7:57	Pierce County Fire Department dispatched to the scene.
8:00	Call for Unified command to be set up at golf course by law enforcement official. Request fire department representative
8:01:10	PCSD arrives on scene.
8:01:33	WSP arrives on the scene.
8:07:42	WSP to Command Post to assume control of scene.
8:11	Command Post set up at golf course request for Fire Department representative
8:15:50	Second call for Fire Department representative for "unified" command post at Golf Course.
8:16:01	Fire Captain to respond over to command post at golf course.
9:02:09	Request for OCME Pierce County Medical Examiner to respond to the scene.
	Note: JBLM's arrival to the scene was not recorded by Pierce County Emergency Communications Center.

Arriving law enforcement agencies performed traffic control, assisted with the extrication of the victims, and interviewed witnesses and victims on the scene, at the local hospitals, and at the reunification center that was set up at City Hall in the City of DuPont.

In addition to the Pierce County Sheriff's Department, the City of Lakewood Police Department and the WSP, several other police agencies responded to the scene. These included the Puyallup Police Department, Bonney Lake Police Department, Federal Way Police Department, Steilacoom Police Department, and the DuPont City Police Department. Officers from these agencies were part of a joint regional task force. One of the senior command officers with the Puyallup Police Department headed the Pierce County Incident Management Team (IMT), which responded to the accident.

1.14.4 Pierce County Incident Management Team

The Pierce County IMT is an integrated team of multidisciplinary professionals of 35-40 members that include law enforcement, fire/rescue services, emergency management, and other county agencies who provide expertise during major incidents to ensure the efficient and effective management of the incident. Not every agency within Pierce County has a representative on the

team. Once the initial rescue operation had been concluded, the IMT assisted with managing the recovery efforts until the scene was cleared.

1.14.5 Fire Department Agencies

JBLM dispatches units through its Emergency Communications Center which receives calls from Pierce County. JBLM's radio communications frequency is not compatible with either the Pierce or Thurston County's radio communication systems.

The lack of interoperability of the JBLM radio communications system with adjacent jurisdictions was known before the derailment. About 2 weeks prior to the accident, agencies from Pierce County and JBLM participated in a combined training exercise. During that training exercise, the participating agencies were unable to "patch" their radio frequencies which should have permitted the participants to communicate directly with one another. Shortly after the training exercise, the West Pierce Fire Department initiated a plan to mitigate the lack of interoperability by stockpiling a cache of portable radios and storing them on a service truck. When dispatched, the radios from this truck could be used to equip agencies, like JBLM, with radios to enhance the communication capabilities for all the responding units. At the time of the derailment, this resource was not used. Few Pierce County Fire Department resources were deployed to the scene due to the overwhelming number of Thurston County Fire Department units that had responded, despite the proximity of the Pierce County units. A JBLM chief officer advised that his agency possessed several Pierce County radios but not in enough quantity for the number of units his agency deploys. None of the JBLM chief officers used these radios during the response.

Several of the first responders from Pierce County told NTSB investigators that there was not a lot of information received over the Pierce County radio frequency. Responding units were not provided basic information as they traveled to the scene. These informational gaps in communications included the location of the command post, the identity of the incident commander, and the location of the staging area. Because of the lack of communications, many first responders reported that they began self-initiated rescue operations which some described as "freelancing." This led to momentary confusion related to the location of personnel and the rescue operations that were underway.

The problems encountered with communications resulted in noncompliance with established policies and procedures. One of these procedures entailed the accounting of personnel on the scene through the Passport Accountability System. Both Pierce County and Thurston County Fire/EMS services use the "passport" system or "pass." "Pass" allows the incident command to maintain accurate track and awareness of where resources are committed at an incident. The system uses an identification tag that contains a rescuer's name, company, and unit designation. These passes are collected on the scene from each emergency responder and maintained by a command officer for personnel safety accountability.

This personnel safety accountability protocol was not followed on the scene of this incident. Several fire company officers reported that they were unable to locate the command post or the command officer in charge of personnel accountability to provide their crew's passports. After a period, the officers gave up and none of the passports were given to or collected by anyone in charge of the overall accountability of personnel on the scene.

JBLM advised that due to the size of the incident, it was decided that each unit would be responsible for keeping track of their own personnel which is contrary to the design of the passport accountability system. Some of the company officers from outside agencies were unaware of the change in the protocol and the decision made by the incident commander.

1.14.6 Law Enforcement Agencies

In addition to difficulties with communication between responding Fire/Rescue and EMS agencies, the fire departments were unable to communicate with responding law enforcement agencies. A separate law enforcement command post was set up away from the interstate in the parking lot at the military base golf course. The first arriving law enforcement agency set up this second command post to facilitate a larger joint "unified" command with the fire departments and law enforcement agencies away from the congestion of the scene. Multiple requests were made for a representative from the fire departments to join the command post. In the end, the two agencies operated their own individual command posts and did not establish an effective communication system between them.

The Pierce County law enforcement agencies were switched over to a common radio frequency for communications during the incident. However, Thurston County law enforcement agencies that use the TComm911 Center could not communicate with the Pierce County agencies without "patching" of radio frequencies, which was not performed. The law enforcement agencies noted that both agencies operated on different frequencies which made patching particularly difficult.[36]

The tracking of police officers on the scene required the ability to communicate with the dispatcher by "coming over the air and checking in" or using the computer assisted dispatch (CAD) system that was part of the county's communications center.

1.14.7 Training

All the involved agencies participate in yearly training exercises that encompass both mass casualty incidents and interagency emergency response scenarios. Both Pierce County and Thurston County have a mass casualty incident plan that provides guidance and assistance in the coordination of the emergency response between agencies within their county. The State of Washington also has a comprehensive emergency management plan for the entire state. These plans incorporate four core elements: EMS protocols, command structure, communications, and asset management (PCEMS 2019). JBLM conducts training exercises with various emergency response agencies within Pierce County.

In addition to local and state government sponsored training, BNSF and Amtrak provide a variety of training opportunities in rail emergencies for state and local governments, first responders, hospital and medical care providers, and other transit agencies. In August 2017, Amtrak sponsored an MCI-train derailment exercise that was attended by individuals from various fire and police departments, local government agencies, a local hospital and the communications

[36] The agencies unsuccessfully tried patching during a drill 2 weeks before the accident. This experience led the command to believe that taking the time to attempt to patch the frequencies would be a waste of time and resources.

center in Pierce County. Representatives from the local transit agency and Sound Transit also attended the training. The exercise consisted of two parts, with the classroom portion held at the Camp Murray National Guard base. The "hands on" training class was scheduled to be held in January 2018.

1.14.8 Postaccident Action

Each of the agencies that responded to the derailment participated in a postaccident critique. These critiques were sponsored by Amtrak and the local government agencies involved.

One of the lessons learned was the failure in the communication system. The deputy director of JBLM Directorate of Emergency Services advised that the location where the derailment occurred is jointly owned by both the state and federal governments. Both the state and JBLM provide fire/rescue and police services to the area. By United States Federal Communications Commission regulation, DOD agency radios operate on the 450 MHz range. State and local law enforcement and fire/rescue agencies operate on the 700-800 MHz band. The communication systems are not compatible. Additionally, the incompatibility creates a problem whenever attempts are made to "patch" the two radio frequencies together during a major incident.

To resolve the interoperability issues, DOD is currently purchasing new Tri-band radios. These radios will permit DOD assets, such as JBLM, to program into the radio the frequencies required to enable communications between state and federal agencies during interjurisdictional operations. This will permit a more efficient communication stream between JBLM, Pierce County, and Thurston County emergency responders. JBLM advised that the new radios will also correct a secondary issue involving the disruption in communications caused by the lack of a "repeater" at the southern end of the military base. The radio communications would be routed through the communications centers, such as South Sound 911, alleviating the need to "patch" into the various frequencies. Until the deployment of the new radios is completed, JBLM will maintain its current protocol for the establishment of a "unified command". The protocol requires that the chief officers of the various agencies be in one centralized location so that information is shared in a timely manner.

1.15 Track and Structure

The 136-pound continuous welded rail in the curve was supported with wooden crossties spaced 19.5-inches apart (center of crosstie to center of adjacent crosstie). The rails were supported by concrete crossties where the track was straight. The rails were sitting on 7 3/4-inch x 16-inch Pandrol tie plates. The rails are fastened to the crossties through the tie plates with elastic type fasteners (McKay on concrete; Pandrol e-clips on wood) to hold the rail in place and retard longitudinal rail movement. Near the curve and tangent track preceding the curve, every crosstie was "box" anchored.[37] Investigators did not observe any unintentional rail movement near the accident site.

[37] *Box anchored* means that each rail has two anchors placed on each side of the crosstie to restrict longitudinal rail movement.

Sound Transit inspected and maintained the Lakewood Subdivision main track as Class 4 track according to federal standards.[38] This allowed passenger trains a maximum speed of 80 mph on the tangent (straight) sections of track, although an additional regulation limited the maximum speed to 79 mph.

1.15.1 Inspections

Investigators examined the records for required track inspections, internal rail tests, and track geometry tests. None of the results from these examinations were noteworthy and those that were required by regulation were performed within standard.

1.15.2 Curve and Signage

Sound Transit identified the permanent speed restrictions for the Lakewood Subdivision in Timetable No. 2, which went into effect on November 13, 2017.[39] All operating crews were required to use the timetable when operating on the subdivision.

The maximum authorized speed for passenger trains on the Lakewood Subdivision was 79 mph. At MP 19.8, there was a 30-mph speed restriction for the sharp curve.[40] There was a sign at MP 19.8 to indicate the speed restriction. Two miles before reaching the curve, at MP 17.8, there were advance warning speed signs of the upcoming speed restriction. The signs "T-30" and "P-30" alerted Talgo (T) and passenger (P) operating crews that a 30-mph speed restriction entering the curve was 2 miles ahead. The advance warning signs have yellow backgrounds and black letters and/or numbers, except signs for Talgo operations have black backgrounds and yellow letters and numbers. (See figures 40 and 41.)

[38] Title 49 *CFR* Part 213, "Track Safety Standards."
[39] The timetable was prepared by BNSF (the former owner of the Lakewood Subdivision) for Sound Transit.
[40] The curve was an 8° 22-minute curve.

Figure 40. Two-mile advance warning speed sign at MP 17.8- 30 mph.

Figure 41. Speed restriction sign at entrance to curve MP 19.8 - 30 mph.

Sound Transit had adopted the BNSF's (former owner of the Lakewood Subdivision) standard plan for the display of signs. The following were the instructions for the placement of advance warnings of a speed restriction:

> Advance warning signs as far as feasible [are] located two miles in advance of a lower speed sign [o]n those lines where both freight and passenger trains operate…

1.16 Signal and Train Control

The Lakewood Subdivision was 20.7 miles of centralized traffic control (CTC) signalized territory owned by Sound Transit and dispatched by BNSF in Fort Worth, Texas.[41] About 5 miles of the subdivision was multiple main, however, it was single main train at the accident location. There are 21 public highway grade crossings and 1 private crossing. The public highway grade crossings were protected with gates and lights.

[41] Train movements in CTC are authorized by signal indication controlled by a train dispatcher at a remote location.

1.16.1 Positive Train Control

Sound Transit was in the process of installing positive train control (PTC) on the Lakewood Subdivision. There are three primary projects associated with activating PTC: (1) wayside hardware and communication, (2) locomotive hardware (this also includes training operating employees), and (3) an overall communication network between locomotives, wayside, and the train dispatching "back office." Sound Transit had completed the first two of these projects and was working with BNSF on the coordination with the train dispatching system when the accident occurred.

2. Analysis

2.1 Introduction

The locomotive engineer of train 501 had been a certified engineer for nearly 4 years, and the conductor qualifying on the territory had been a qualified conductor for nearly 6 years. Both had maintained regular work and rest schedules on the days leading up to the accident, and there was no evidence that either had suffered from fatigue. The engineer was successfully being treated for OSA, type-2 diabetes, hypertension, and high cholesterol. The conductor was in good health. Neither was impaired by drugs or alcohol, and neither was using a cell phone or other personal electronic device while operating the train. Neither had previous disciplinary actions. They were not distracted by problems with the passengers. At the time of the accident, there was slight precipitation and it was generally dark outside.

The locomotive and the passenger railcars passed postaccident mechanical inspections. A review of preaccident testing did not reveal any functional defects.

Investigators examined the records for track and signal inspections and maintenance. The undamaged track was examined during the on-scene investigation. The track and signal system were inspected and maintained within regulatory standards, and no track or signal anomalies were discovered after the derailment.

The NTSB concludes that none of the following was a factor in this accident: the mechanical readiness of the train, the condition of the track or signal system, the weather, cell phone use, medical conditions of the Amtrak engineer, use of alcohol or other drugs, fatigue, or any impairment or distraction.

2.2 Inward-Facing Audio and Image Recorders

The Charger locomotive was equipped with an inward-facing image recorder that provided investigators with both a visual and audio recording of the crewmember activities during the accident trip. Amtrak installed these devices even though they are not required by the FRA.

The NTSB has determined that dozens of previous railroad accident investigations would have benefitted from this technology. In a number of these accidents, the operator was killed, seriously injured, or could not recall details moments before the accident. However, even in the cases where the operator was not injured, audio and image recorders could be used to help verify what might have been seen and what actions were taken during the accident sequence.

For instance, inward-facing cameras were beneficial in recent accident investigations, including the January 4, 2017, collision of two Southeastern Pennsylvania Transportation Authority trolleys in Philadelphia, Pennsylvania, and the April 3, 2016, Amtrak accident in Chester, Pennsylvania (NTSB 2018) (NTSB 2017). In those accidents, as well as this one, investigators used the image recordings to gather additional pertinent information about the entire accident sequence and used the audio recordings to corroborate the statements made by the operating crews. In turn, this information was used to develop recommendations to improve the

safety of train operations. These types of recorders are also critical to improving operational safety and management oversight.

Unfortunately, in many other railroad accidents, the NTSB has not been able to determine the actions of the crewmembers operating the train due to the lack of inward-facing image and audio recordings. For instance, in the April 28, 2015, accident involving a Southwestern Railroad train in Roswell, New Mexico, a member of the train crew was under the influence of marijuana (NTSB 2018a). However, the absence of image and audio recordings prevented the NTSB from determining the actions of the crewmembers leading up to the accident.

The NTSB had similar issues when investigating the September 12, 2008, accident in Chatsworth, California (NTSB 2010). The NTSB was unable to determine the actions of the Metrolink engineer leading up to the collision and after discovering some illicit activities by the engineer during previous trips. The NTSB realized that the railroad had no way of monitoring the engineer's activities to ensure appropriate behaviors. This accident, in which 25 people were killed and 102 people were injured, underscored the importance of understanding the activities of crewmembers in the time leading up to the accident. As a result of that investigation, the NTSB made the following safety recommendations to the FRA:

> Require the installation, in all controlling locomotive cabs and cab car operating compartments, of crash- and fire-protected inward- and outward-facing audio and image recorders capable of providing recordings to verify that train crew actions are in accordance with rules and procedures that are essential to safety as well as train conditions. The devices should have a minimum 12-hour continuous recording capability with recordings that are easily accessible for review, with appropriate limitations on public release, for the investigation of accidents or for use by management in carrying out efficiency testing and systemwide performance monitoring programs. (R-10-1)
>
> Require that railroads regularly review and use in-cab audio and image recordings (with appropriate limitations on public release), in conjunction with other performance data, to verify that train crew actions are in accordance with rules and procedures that are essential to safety. (R-10-2)

The NTSB reiterated these recommendations following the May 12, 2015, derailment of an Amtrak passenger train in Philadelphia, Pennsylvania, in which 8 passengers died and over 200 passengers were injured (NTSB 2016). At the time, the FRA said that it had begun the process of issuing a notice of proposed rulemaking mandating the installation of inward- and outward-facing audio and image recorders in the controlling locomotive cab and cab car operating compartments.

The NTSB continues to believe that inward- and outward-facing audio and image recorders improve the quality of accident investigations and provide the opportunity for proactive steps by railroad management and the FRA to improve operational safety. Consequently, in the Roswell accident, the NTSB again reiterated Safety Recommendation R-10-1 and

Safety Recommendation R-10-2 to the FRA.[42] The current status of those recommendations is "Open—Acceptable Response."

The NTSB is also aware that, not later than 2 years after the date of FAST Act, the Secretary of Transportation shall promulgate regulations to require each railroad carrier that provides regularly scheduled intercity rail passenger or commuter rail passenger transportation to the public to install inward- and outward-facing image recording devices in all controlling locomotive cabs and cab car operating compartments in such passenger trains. This rulemaking required the installation of inward- and outward-facing locomotive image recorders on controlling locomotives of passenger trains. The recordings would be used to help determine the cause of railroad accidents and to prevent similar accidents.

The NTSB notes that the FAST Act does not require in-cab audio. The NTSB believes that both image and audio recording devices are needed to conduct comprehensive accident investigations. Regardless, the FRA has not developed regulations requiring the installation of any recording devices in intercity rail passenger or commuter passenger transportation, despite the passing of the 2-year deadline.

The NTSB concludes that this accident has demonstrated the value of image and audio data for the accident investigation and development of safety recommendations. Nonetheless, after six reiterations of the NTSB's Safety Recommendation R-10-01, the FRA has not taken positive action regarding inward-facing devices nor developed inward-facing recorder regulations discussed in the FAST Act. Therefore, the NTSB concludes that the FRA has demonstrated an unwillingness to implement the recommendations and regulation that would require inward-facing video and audio devices that are critical to accident investigations and improving safety on our nation's railroads. Further, the NTSB concludes that inward-facing recorders with both image and audio capabilities can increase the understanding of the circumstances of an accident, and, ultimately, provide greater precision in safety recommendations and subsequent safety improvements. Therefore, the NTSB recommends that the United States Secretary of Transportation require the FRA to comply with the FAST Act and issue regulations for inward-facing recorder regulations that include audio recordings as recommended by NTSB in Safety Recommendations R-10-01 and R-10-02.

2.3 Positive Train Control

At the time of the accident, BNSF, Amtrak, and Sound Transit were still working on the installation, testing and verification, and validation of the PTC system. PTC, as mandated by Congress, must be designed to prevent train-to-train collisions; derailments caused by excessive speed; unauthorized incursions by trains onto sections of track where maintenance activities are taking place; and the movement of a train through a track switch left in the wrong position. Since installation and testing was not complete, the PTC system was not in operation at the time of the accident.

[42] At the time of the accident, Southwestern Railroad had a lease with BNSF to operate trains and maintain the track from Clovis, New Mexico, to Carlsbad, New Mexico. However, since then, BNSF has terminated the lease and currently operates this track with its own personnel and equipment.

The NTSB recognizes that had PTC been operational, the engineer would have been notified of his location and speed in the cab. With PTC, a screen displays the train's location to the engineer and warns of an upcoming speed reduction. If the engineer does not respond appropriately to the speed reduction, PTC will stop the train. Therefore, the NTSB concludes that had the PTC system been fully installed and operational at the time of the accident, it would have intervened to stop train prior to the curve, thus preventing the accident.

2.4 Human Performance

The engineer of train 501 qualified on the Point Defiance Bypass 2 days before the accident occurred. The accident trip was his first time operating on the territory in revenue service and without supervision. He was accompanied in the operating compartment by a qualifying conductor who was making his first trip over that territory. The engineer's qualification training included a number of observation rides, then making two northbound and one southbound trips while operating the train under supervision of a road foreman. Some of these trips were made on the Charger locomotive, the type of lead locomotive involved in the accident. The engineer was aware of the 30-mph curve at MP 19.8. On the morning of the accident the road foreman phoned the engineer and recalled saying "remember the curve, slow down early, take your time, be careful." However, while traversing the territory, the engineer missed key wayside milepost signs and ultimately was surprised that he had reached the curve in an overspeed state.

During the review of the inward-facing cab video and audio, investigators determined that the brief conversations between the engineer and the conductor during the trip did not distract them from their operational duties or hamper their ability to identify wayside signs. During the time the engineer missed signs between MP 18 and MP 19, he was looking ahead and not engaged in conversation. Moreover, the crew's brief exchange after MP 19 was halted when the overspeed alarm was activated, which allowed the engineer to assess the situation without interference.

Local Amtrak supervisors and a BLET local chairman did not believe that the physical characteristics of a territory was particularly difficult to learn. They recognized that the 30-mph curve at MP 19.8 posed the greatest potential hazard and believed that their training on the physical characteristics of the territory provided engineers with the necessary skills to operate a train safely over the new territory. They also believed that the training on the Charger locomotive that occurred before the inaugural operations on the Point Defiance Bypass was adequate. The NTSB, however, is concerned that engineers operating on the new Point Defiance Bypass territory needed additional competency in both the features of the Charger locomotive and the physical characteristics of the territory. Typically, engineers qualify on territories while operating locomotives with which they are familiar. Their proficiency with the locomotive allows them to focus on the details of the territory without having to also learn the particulars of the equipment. In this accident, however, the engineer only had rudimentary knowledge and experience with both the Charger locomotive and the physical characteristics of the territory. He may not have developed the necessary competency to manage ambiguous situations – such as unfamiliar locomotive alarms while concurrently maintaining a vigilant watch on the territory being traversed. To understand this, NTSB investigators examined the Amtrak engineer's training on both the territory and the equipment to operate safely in all conditions.

2.4.1 Qualification Trips on the Territory

Amtrak supervisors developed the training needed to qualify operating crews on the physical characteristics of the Lakewood Subdivision. While some Amtrak officials mentioned that they would have preferred additional training time (to expose crews to both daytime and nighttime operations, for example), they believed that the number of observation rides and actual throttle time provided was sufficient. Both the Amtrak engineer and the road foreman of engines (Amtrak supervisor at Seattle) overseeing the engineer's qualification runs believed that the qualification training was adequate.

The Amtrak engineer was aware of the curve at MP 19.8 and the 30-mph speed restriction. As he operated over the territory toward that curve, he relied on MP signs to help him identify his location. He had successfully identified MP 16 and MP 17. He did not recall seeing the advanced warning speed reduction sign at MP 17.8, which is 2 miles from the curve at MP 19.8. While this sign is significant to freight operations that initiate braking at this location, it did not have operational relevance for the Amtrak engineer whose strategy was to initiate braking about one mile from the curve. However, he did not see the sign at MP 18, despite not being distracted by or engaged in another task as he approached that sign.[43] He also did not see the sign at the signal at MP 18.8, the location where he planned to initiate braking. Investigators noted, however, that this sign was highly inconspicuous because it blended in with the signal box directly behind it.

The Amtrak engineer, on other territories where he had considerable experience, used stationary objects such as bridges, buildings, siding switches, and signals as cues of his location. Such external cues are typically developed over time as operating crews become more familiar with the territory. On the Lakewood Subdivision, a potential landmark could have been the I-5 overpass between MP 18 and MP 18.8. However, because of his minimal exposure with the territory, one operating trip in the dark in the southbound direction, the engineer had not established or used wayside landmarks to help him identify his location.

As previously discussed, the Amtrak engineer passed, on the first attempt, his written exam on the physical characteristics of the territory which included a question about the curve at MP 19.8. While the examination contained questions about signage, it did not include questions regarding the use of landmarks that could aid the crew in identifying the train's location. Operating crews with limited experience on a territory rely more heavily on wayside signage, and those who fail to see the wayside signs are more prone to misidentify their location. Without the use of landmarks, the Amtrak engineer did not recognize that he had passed the signs at MP 18 and MP 18.8. Consequently, he initially misidentified the signal entering the curve at MP 19.8 as being the signal at MP 18.8.

The NTSB concludes that the Amtrak qualification program for the Point Defiance Bypass did not effectively train and test qualifying crewmembers on the physical characteristics of a new territory. Therefore, the NTSB recommends that Amtrak ensure operating crewmembers demonstrate their proficiency on the physical characteristics of a territory by using all resources

[43] It is unclear if background lights from the highway affected his vision.

available to them, including: in-cab instruments, signage, signals, and landmarks; under daylight and nighttime conditions; and during observation rides, throttle time, and written examinations.

2.4.2 Training on the Equipment

The Amtrak engineer participated in group training for the Charger locomotive several months before his first trip. This involved classroom instruction, as well as exposure to the operating compartment and familiarization with the display screens and controls. The engineers, however, did not have the opportunity to operate the Charger locomotive during that initial training period. Moreover, during the qualification process, the observation rides and time spent operating the train were only occasionally performed on the Charger locomotive. This limited their opportunity to experience all elements of the controls, including the audio and visual alerts/alarms, as well as the operating consequences associated with those alarm. Specifically, the engineer had not seen or heard the alarm associated with an overspeed situation, nor practiced the appropriate response for an overspeed alarm.

The engineer noted to investigators that because this was his first "solo" trip in the locomotive, he wanted to "sit in the seat, … familiarize myself with the position of the gauges and what they were going to tell me," however, the engineer further stated that he was unable to do this due to the mechanics of continued troubleshooting of the train. Based on his statement to investigators, the engineer did not have as much time as he would have liked to familiarize himself with the new locomotive just prior to picking up passengers at the Seattle King Street Station.

In this accident, the engineer said many times he was unfamiliar with the overspeed alarm in the Charger locomotive. Investigators were able to determine that the locomotive was manufactured to meet AAR specification M-591, Locomotive System Integration Operating Display (2010). The standardization of locomotive alarms and controls is recognized as a benefit to all train crews. This standard applies to all new road locomotives equipped with electronics ordered after January 1, 2008. The scope of this standard states the following:

> This document defines the basic requirements for an industry standard visual display of locomotive operating information. This display is a part of the user interface between the operator and the integrated cab electronics environment. It is intended that the specification of these items will define a display concept that achieves a level of standardization while allowing enough flexibility to encourage innovation and accommodating unique railroad requirements.

AAR Standard M-591 defines location, size, text, color, audio (when required), and priority for each standard critical warning alarm that would include overspeed alarms.

Early into the accident trip, the engineer told the conductor that this was a learning experience for him, including what throttle position he needed to use to maintain speed. He made all station stops without incident. However, while operating over the portion of the territory on which he had experience, his train exceeded the temporary restricted speed by about 10 mph. It is unclear if that was the result of him being unaware of the speed restriction or if he mismanaged the train's speed.

The mile of track leading up to the accident curve was a critical portion of the trip. The engineer had planned to use the sign at MP 18.8 as his cue to initiate braking to slow the train for the MP 19.8 curve 1 mile away. However, he missed that sign and did not slow the train when he passed that area. He continued to look forward and outside the front windshield.

Just over 1/2-mile (and about 27 seconds) from the accident curve, with the train traveling at 82 mph, the engineer heard a series of double beeps, saw flashing text on one screen, and saw illuminated lights on another screen. His focus then shifted from outside the train to the inside as he analyzed the audible and visual alarms that he had not previously experienced on this locomotive. Specifically, he spent most of the next 20 seconds looking at the screens on the control panel, trying to understand the meaning and implications of the alerts. During this period, he briefly looked up and saw the signal at MP 19.8, but initially believed that was the signal at MP 18.8. He then returned his gaze to the control screens and finally recognized that he had tripped the overspeed alarm. However, this recognition occurred only about 5 seconds before the train reached the curve.

For an extended period, the engineer was unclear about the meaning of the audible and visual alerts and the relevance to train operations. His prolonged attention on the control screens, at the expense of looking outside the cab, minimized his opportunity to scan the territory and identify his location or potential hazards. Moreover, his focus on the alarms likely affected his sense of the time and distance his train had traveled. Consequently, he was unaware that he was nearing the curve in the moments prior to the accident. If the engineer had been familiar with the overspeed alarm, he likely would have spent less time managing the alarm and maintained greater vigilance outside the locomotive. Therefore, the NTSB concludes that Amtrak did not provide sufficient training on all characteristics of the Charger locomotive. The NTSB further concludes that the engineer's unfamiliarity with, and fixation on, the audible and visual alerts associated with the overspeed alarm reduced his vigilance of events outside the locomotive moments before the accident. Therefore, the NTSB recommends that Amtrak revise its classroom and road training program to ensure that operating crews fully understand all locomotive operating characteristics, alarms, and the appropriate response to abnormal conditions.

Amtrak's locomotive engineer training program for the northeast corridor effectively uses train simulators to help familiarize trainees on locomotives and on the territory where they operate. Simulator training provides trainees with the opportunity to experience and respond to a wider range of events over a shorter period of time. However, Amtrak has not initiated widespread use of simulator training, particularly with engineers operating new or unfamiliar equipment. The NTSB concludes that engineers could better master the characteristics of a new locomotive or territory with the use of simulators. Therefore, the NTSB recommends that Amtrak require that all engineers undergo simulator training before operating new or unfamiliar equipment (at a minimum, experience and respond properly to all alarms), and when possible, undergo simulator training before operating in revenue service in a new territory and experience normal and abnormal conditions on that territory.

2.4.3 Developing Training Programs

This accident illustrated that external challenges (such as operating on a new territory) can adversely interact with internal demands (such as operating a new locomotive with unique alarms

and displays, or with new crewmembers) and affect safe train operations. These factors must be considered when developing an effective training and qualification program. Rather than relying primarily on subjective measures or individual experiences to develop a training program, a task analysis can objectively identify the skills required for safe operations. A task analysis is the systematic identification of the fundamental elements of the tasks comprising a job, and the examination of the knowledge and skills required for successfully completing the job. This information can be used to develop training programs and evaluation tools.

An FRA report recognizes cognitive tasks analysis (CTA) as a means to "identify and take into account the cognitive requirements inherent in performing complex work" such as operating a train (FRA 2013). The report further states:

> Cognitive task analysis methods provide a means to explicitly identify the knowledge and mental processing demands of cognitive work (e.g., what knowledge and skills people need to learn to do the job; what things they need to attend to and what mental calculations they must make to perform a task). CTA methods also provide a means to identify the kinds of errors that workers are prone to and the factors that contribute to those errors (e.g., confusable displays, high workload, lack of understanding of how the technology works).[44]

Amtrak used subjective evaluations in lieu of objective criteria to determine if employees were qualified on the Point Defiance Bypass. There was no written evidence that Amtrak had developed a task analysis of the skills necessary to safely operate on the bypass. Further, Amtrak had no objective performance criteria to evaluate operating employees on their ability to operate safely on the new territory. The NTSB concludes that a systematic approach to training would have aided Amtrak managers in recognizing the challenge of operating new equipment on new territories. Therefore, the NTSB recommends that Amtrak implement a formal, systematic approach to developing training and qualification programs to identify the most effective strategies for preparing crewmembers to safely operate new equipment on new territories.

2.4.4 Advance Warning Speed Reduction Signs

Investigators noted advance warning speed reduction signs ("T-30" and "P-30") on the Point Defiance Bypass at MP 17.8 alerting Talgo (T) and passenger (P) operating crews that a 30-mph speed restriction entering the curve was 2 miles ahead. The BNSF rulebook (that applied to the bypass) specified that the advance warning sign will be placed 2 miles in advance of the location where the lower speed takes effect. This location may be based on several factors, including the braking distances for freight trains, which may require 2 miles to safely slow the train. On the Point Defiance Bypass, this rule applied to Talgo and passenger trains when there was an upcoming significant speed reduction requirement.[45] The rulebook also indicates that a sign repeating the permissible speed be placed at the point where the reduced speed applied (such

[44] As discussed in this report, the potential errors presented in the FRA study occurred in the DuPont accident.

[45] There was not an advance warning sign for freight trains at this location because freight trains were already operating at a slower speed.

as at the entrance of a curve). Investigators noted that there was no additional signage indicating a speed reduction until the entrance of the curve.

The BLET local chairman stated that while operating crews do not normally use advanced warning signs, they are important to use in a new territory. The Amtrak engineer did not recall observing the advance warning sign at MP 17.8, in part, because it was located too far in advance of the curve for him to be concerned about slowing down at that point. An Amtrak official suggested that the advance warning signs may have immediate significance for freight trains who initiate braking about 2 miles before the curve but have less benefit for passenger operations, who typically begin braking about 1 mile before reaching the curve.

Advance warning signs provide an added layer of safety for operating crews, particularly those who are new to the territory. The NTSB, however, contends that a single sign installed 2 miles from a speed reduction may not provide equal and optimal levels of safety for freight, Talgo, and passenger train crews. For instance, an operating crew of the freight train may use the advance warning sign as a cue to immediately begin braking. However, because he had no need to initiate braking at that location, the Amtrak engineer paid little attention to that sign because it did not immediately affect his train operations.

Human factors research has found that effective warnings must initially attract attention and stand out from the background (such as be salient or conspicuous) particularly in cluttered environments where other stimuli compete for their attention (Wogalter and Laughery 1996). Thus, consideration must be given to the design of warning signs, including its shape, print size, color, contrast to the background, location (both spatial and temporal), illumination, and passive vs. active (for instance, flashing) to enhance their saliency.

The highway industry uses warning signs to alert drivers of an upcoming speed reduction. Supplemental warning plaques may be used in combination with warning signs when road engineering assessments reveal that drivers require additional warning information beyond that contained in the main message of the warning sign. These supplemental plaques include distance ahead plaques, which may be used to inform drivers of the distance to the condition indicated by the warning sign. For example, the distance ahead plaques may display “2 MILES”, “1 MILE”, and “500 FEET.”

In this accident, the Amtrak engineer may have benefited from supplemental warning plaques closer to the curve. Supplemental warning plaques strategically installed between MP 17.8 and the curve at MP 19.8 (for instance, at or near MP 18.8 where he planned to initiate braking) may have aided the Amtrak engineer in identifying his location and prompted him to begin slowing his train for the upcoming 30-mph curve. The NTSB concludes that supplemental warning plaques, such as distance ahead plaques, or other types of conspicuous signs strategically positioned after an advance warning speed reduction sign would provide enhanced visibility as an added level of safety for operating crews of passenger and freight trains. Therefore, the NTSB recommends that Amtrak work with host railroads and states that own infrastructure over which you operate to conduct a comprehensive assessment of the territories to ensure that necessary wayside signs and plaques are identified, highly conspicuous, and strategically located to provide operating crews the information needed to safely operate their trains. Additionally, the NTSB recommends that the

FRA study the efficacy of how signs used in other modes of transportation may be effectively used in the railroad industry.

2.4.5 Qualifying Conductor Role and Responsibilities

Conductors and locomotive engineers jointly contribute to the set of cognitive activities required to operate the train safely and efficiently. Conductors not only serve as a "second pair of eyes," alerting the locomotive engineer to upcoming signals and potential hazards (such as activity at grade crossings or people working on or about the track), they also contribute knowledge and decision-making to the locomotive engineer when the crew is faced with challenging situations (Rosenhand, Roth, and Multer 2012).

The Amtrak engineer and qualifying conductor called out signals on the accident trip. But each crewmember believed that the qualifying conductor, who had no familiarity with the territory, had little responsibility beyond that. The qualifying conductor used this trip to familiarize himself with the territory, and mostly took a passive role in train operations. Amtrak officials believed that qualifying conductors riding on the head end could have a greater role in train operations, including calling out signals and restrictions, and helping with radio communications. The NTSB also recognizes that the qualifying conductor had not previously traversed the Point Defiance Bypass, and consequently, would not have been expected to perform all the duties of a conductor qualified on the territory.

Investigators, however, considered if all crewmembers, even those unqualified on a territory, could potentially perform a critical role in establishing safe train operations. The Amtrak engineer, though qualified, had minimal experience on the territory. The qualifying conductor knew that this was the engineer's first revenue trip on the new territory, and early in the trip the engineer told him that he was still becoming familiar with the locomotive. Given these circumstances, the NTSB suggests that a qualifying conductor could have had an even greater role in establishing and maintaining safe operations. For instance, a qualifying conductor could have assisted the engineer in identifying critical signs, such as MP 18.8, where the engineer planned to initiate braking for the upcoming curve. Moments before the accident the engineer experienced some confusion, became fixated on the computer control displays, and was not looking outside the locomotive cab on a continuous basis. A crewmember trained in Crew Resource Management (CRM) principles may have recognized these behaviors as clues that an error chain is in progress that may lead to an accident and expressed his concerns to the engineer (Adelsohn 2019).[46] Amtrak's CRM program acknowledges the importance of recognizing deteriorating situations, and the need to act to prevent accidents. At the very least, a qualifying crewmember could have taken

[46] (a) New Amtrak hires receive CRM training once at Amtrak's training center in Wilmington, Delaware, or attending a new hire class in the field. All other transportation employees are scheduled annually during recurrent training. (b) One concept in human error is the error chain, that suggests in each accident there are a series of errors that link together to form the error chain that is not broken in time to prevent the accident. However, if one link of the chain were broken, the accident would not occur.

a more active role in maintaining vigilance outside and detecting potential hazards ahead, including the upcoming curve.[47]

Moreover, Amtrak's CRM program recognizes the impediments to teamwork and communication, such as compartmentalizing jobs or duties, and how junior crewmembers could provide valuable input. In this accident, the NTSB understands that the qualifying conductor perceived his trip as a learning experience, and the Board does not believe that his performance was unexpected. The NTSB, however, suggests that qualifying crewmembers, if effectively used, can be valuable assets to train operations. The NTSB concludes that crewmembers qualifying on a territory can and should play an active role in establishing and maintaining safe train operations. Consequently, the NTSB recommends that Amtrak conduct training that specifies and reinforces how each crewmember, including those who have not received their certifications or qualifications, may be used as a resource to assist in establishing and maintaining safe train operations.

2.5 Preparation for Inaugural Cascades Service on Bypass

2.5.1 Multiple Agency/Organization Coordination

The preparation for the inaugural run of the Cascades service on the Point Defiance Bypass was complex since it involved coordination between Sound Transit, WSDOT, Amtrak, and the FRA over a new section of track that was not outfitted with PTC. Each organization had critical roles in ensuring safe operation of the new service.

However, the NTSB's review of the coordination between these organizations shows inconsistencies and lack of defined responsibilities. Investigators found that not every agency was represented consistently during all the preparation meetings. During interviews with agency representatives, and from the evidence provided at the NTSB investigative hearing, it was evident that the responsibility of each agency was unclear. During the NTSB investigative hearing on this accident, Member Earl Weener asked the following question to management representatives from the agencies involved in the Point Defiance Bypass Project:

> Then we come to the one that confused me, the design responsibility, in particular, that curve that is so troublesome here. I was a Board Member on scene at Spuyten Duyvil and that was a similar case of 80 miles an hour into a 30-mile-an-hour curve, and it had very predictable results. Physics does that. Usually in the design process, when you, as a designer or an engineer, realize that you've got a problem area, you try to figure out what the mitigation is. In this case, this curve was problematic. Who had the responsibility to point out or determine or take a first crack at the mitigations for an 80-mile-an-hour to a 30-mile-an-hour curve?

After a long pause, no one responded from the panel and Member Weener commented:

[47] An analogous function is performed in the marine industry by a "lookout." A lookout is a crewmember at the ship's bridge who maintains a continuous watch and reports any kind of navigational hazard - including other ships, debris, floating objects - to the officer on watch.

> That's what I was afraid of. So, nobody's responsible for the mitigation, the potential mitigation or at least the identification of that curve as being as problematic as it turned out to be?

Member Weener's exchange during the hearing highlights the general sense that none of the participants understood the scope of their roles and responsibilities as they pertained to the safe operations of the service. The NTSB concludes that had the WSDOT, Sound Transit, Amtrak, and the FRA been more engaged and assertive, and had clearly defined roles and responsibilities during the preparation of the inaugural service, it would have been more likely that safety hazards, such as the speed reduction for the curve, would have been better identified and addressed.

2.5.2 Railroad System Safety Analysis

Fatal derailments of two passenger trains led the FRA to develop and issue several emergency orders (EO) and safety advisories (SA) in 2013 and 2015.[48] They included:

- EO 29 - sent to Metro-North Railroad after the Spuyten Duyvil derailment to identify all curve locations with speed reductions of 20 mph or greater and mitigate risks of overspeed derailments through signal modifications, PTC, crew focus areas, and/or enhanced signage.

- EO 31 - sent to Amtrak after the Philadelphia derailment to focus on the Northeast Corridor, identify all curve locations with speed reductions of 20 mph or greater and mitigate risks of overspeed derailments through signal modifications, PTC, crew focus areas, and/or enhanced signage.

- SA 2013-8 - sent to all passenger and intercity railroads to inform them of the circumstances of the Metro-North derailment and to focus compliance efforts on maximum authorized speed and permanent speed restriction locations.

- SA 2015-3 - sent to all passenger and intercity railroads to inform them of the circumstances of the Amtrak Philadelphia derailment and to survey their territories for all locations with permanent speed reductions of 20 mph or greater and to mitigate through signal modifications, PTC, crew focus zones, and or enhanced signage.

The two derailments occurred within 18 months of each other and involved passenger trains exceeding speed limits through curves.

The FAST Act also required the FRA to submit a report to Congress specifying FRA actions taken and summarizing completion status by all intercity passenger and commuter railroads to address safety concerns highlighted by FRA in EO 29, EO 31, SA 2013-8, and SA 2015-3. The

[48] These two accidents were the December 1, 2013, accident at Spuyten Duyvil, Bronx, New York, involving Metro-North passenger train 8808, and the May 12, 2015, accident near Philadelphia, Pennsylvania, involving Amtrak passenger train 188.

report was submitted in May 2016. Both Sound Transit and Amtrak provided responses to all these EOs and SAs.

The FAST Act required each railroad carrier providing intercity rail passenger transportation or commuter rail passenger transportation, in consultation with host railroad carriers, to survey their systems and identify each main track location where there is a reduction of more than 20 mph from the approach speed to a curve, bridge, or tunnel, and the maximum authorized operating speed for passenger trains at that curve, bridge, or tunnel, and develop appropriate actions to enable warning and enforcement of the maximum authorized speed for passenger trains at each of those locations. The plans must be reviewed and approved by the Secretary of Transportation, who is also provided authority to add conditions to the approval. The FAST Act did not require the FRA to continue to solicit updates from railroads beyond the initial submission deadline, nor did the FRA pursue additional submissions for new or updated routes from railroads that owned or operated service on such routes even though the FRA has authority to do so. Because the upgrade of the Lakewood Subdivision had not yet occurred at the time of the EOs or enactment of the FAST Act, the accident curve at MP 19.8 was not addressed in any speed limit action plans. Additionally, the FRA did not require railroads in the planning or construction phases of projects to evaluate the potential risk to future operational territories, and Sound Transit did not apply risk mitigation strategies as outlined by the FAST Act on the accident curve at MP 19.8.

The NTSB concludes that the FRA did not use its authority provided under the Fixing America's Surface Transportation Act to approve speed limit action plans with conditions to require inclusion of planned and under-construction alignments owned or operated by railroads and require periodic updates to railroads' speed limit action plans, which led to no speed limit action plan being developed.

Although the FRA participated in the Lakewood Subdivision project through Federal Grant Funding Administration and Safety Oversight, FRA officials located in both headquarters and in the field failed to recognize that additional hazard mitigations strategies were not implemented by Sound Transit or Amtrak on the Lakewood Subdivision at the accident location. The FAST Act did not require speed limit action plans to be submitted for new or upgraded territories by railroads that owned or operated service on such territories. The NTSB concludes that the FRA should have ensured that speed limit action plans include new or updated routes owned or operated by railroads, using its authority in the FAST Act. Therefore, the NTSB recommends that the FRA require railroads to periodically review and update their speed limit action plans to reflect any operational or territorial operating changes requiring additional safety mitigations and to continually monitor the effectiveness of their speed limit action plan mitigations. The NTSB also recommends that FRA require railroads to apply their existing speed limit action plan criteria for overspeed risk mitigation to all current and future projects in the planning, design, and construction phases, including projects where operations are provided under contract.

2.5.3 Sound Transit

On November 6, 2015, Sound Transit issued Sounder Commuter Rail Timetable #1. This timetable included the recommendation from FRA Safety Advisory 2015-03 by adding General Order 5, "Crew Focus Zones," which required additional safety communication between the train

crew in advance of permanent speed restrictions.[49] The only applicable location of the general order at that time was MP 3.4 northbound. At the time of publication of the timetable and general order, there was no passenger rail service south of Lakewood. Sound Transit submitted its FAST Act speed limit action plan to the FRA on June 28, 2016, and identified one location (MP 3.4) which met the requirement.[50]

In preparation for the initiation of passenger service on the entire Lakewood Subdivision, Sound Transit issued Sounder Commuter Rail Timetable #2, in effect at 0001 Pacific Continental Time, on November 13, 2017. The timetable contains various speed restrictions and specific instructions for freight, Talgo (Amtrak), and Sound Transit trains operating over the Lakewood Subdivision.

In the timetable, the permanent speed restriction at northbound MP 3.4 where the speed drops from 75 mph for Talgo trains at MP 4.1 to 35 mph at MP 3.4 (as previously identified in Sound Transit's FAST Act Action Plan) continued to be acknowledged as a crew focus zone.[51] However, since their trains were not operating at the south end of the bypass at that time, Sound Transit did not designate MP 19.8 (where Talgo speeds drop from 79 mph to 30 mph) as a crew focus zone.

By not including MP 19.8 as a crew focus zone in their timetable, Sound Transit failed to apply the same level of speed restriction risk mitigation throughout the Lakewood Subdivision. When asked about adding MP 19.8 to the crew focus zone in the timetable, Sound Transit operations managers stated that "it would be incumbent upon Amtrak…on how they will comply with the FAST Act, not Sound Transit's or BNSF's responsibility because we don't operate on the part of the territory." NTSB investigators also found that Sound Transit did not coordinate with Amtrak in the development of the timetable even though Amtrak would be the sole tenant on the southern end of the operating territory. The operations manager's response highlights a fundamental lack of understanding of a basic principle of railroading: the owner or host of the territory issues a timetable governing the operating speeds and special instructions that apply to tenant railroads. It further highlights both the lack of coordination between organizations and the lack of clear responsibilities between organizations during the safety certification phase of the Lakewood Subdivision upgrade project. The NTSB concludes that Sound Transit did not update the timetable on its Lakewood Subdivision to identify the curve at MP 19.8 as a crew focus zone, which would have helped to mitigate the overspeed derailment risk. Therefore, the NTSB recommends that Sound Transit immediately conduct a review of all operating documents and ensure that safety mitigations are applied with uniformity throughout the entirety of its territory. In areas of its territory where Sound Transit is a host of a tenant railroad, the NTSB recommends

[49] (a) The conductor must communicate with the engineer not less than 1 mile from an area where a reduction of speed of more than 20 mph takes affect and is required to take appropriate action to ensure the safe operation of the train if the engineer fails to acknowledge the restriction. (b) SA 2015-03 required additional safety mitigations at locations where there is a speed reduction of more than 20 mph from the approach speed to a curve, bridge, or tunnel and the maximum authorized operating speed for passenger trains.

[50] SA 2015-03 was applicable to all passenger railroads and railroads that host passenger service.

[51] *Crew focus zones* are locations where the operating crews are required to communicate warnings of upcoming speed restrictions.

that Sound Transit coordinate with all current and any prospective tenants on the development of operating documents including timetables, general orders, and special instructions.

2.5.4 Amtrak

In response to FRA Emergency Order 31, May 23, 2015, Amtrak developed a speed limit action plan on July 2, 2016, that lists all locations meeting the mitigation requirements throughout the Amtrak National Network where permanent speed restrictions are in place. On the day of the accident, the Lakewood Subdivision was not included in Amtrak's speed limit action plan. In interviews with investigators, both Amtrak road foremen noticed that the permanent speed restriction at MP 19.8 should require a FAST Act speed limit reduction mitigation but did not elevate their concerns within the Amtrak management chain. The Amtrak assistant superintendent told investigators that the plan was to update Amtrak's speed limit action plan in January (several weeks after revenue service had begun on the subdivision) through a general order that would be issued implementing a "crew focus zone" at MP 19.8. According to the assistant superintendent, this was the responsibility of the Amtrak Pacific Northwest Division and was overlooked prior to initiating service.[52] The NTSB concludes that Amtrak failed to update the operating documents prior to starting revenue service which would have highlighted the speed reduction at the accident curve. The NTSB recommends that Amtrak update its safety review process to ensure that all operating documents are up to date and accurate before initiating new or revised revenue operations.

2.5.5 Safety and Security Management Plan

Sound Transit conducts safety verification and certification activities of new and refurbished systems including rolling stock and infrastructure in accordance with the 2015 Sound Transit Safety and Security Management Plan (SSMP). Sound Transit's SSMP identifies the management structures, responsibilities, and authorities for documenting and confirming the tasks necessary to integrate safety and security into each phase of Sound Transit's capital projects. The SSMP also required the evaluation, verification, and documentation of static and dynamic testing of installed systems, signage, and clearances through a safety certification process.

Sound Transit used a contractor to build, test, and commission the newly refurbished track, infrastructure, and grade crossings on the Lakewood Subdivision. However, Sound Transit remained responsible for oversight of the contractor's work, provided field staff during testing, and required contractor documentation to verify the testing and commissioning of installed equipment in accordance with relevant contract specifications. Sound Transit's SSMP identifies plans, management structure, responsibilities, and authority for documentation, confirmation, activities, and tasks necessary to integrate safety and security into each phase of Sound Transit's capital projects. The SSMP describes the integration of safety and security activities, including methods for identifying, evaluating, mitigating, and resolving safety hazards and security vulnerabilities throughout all phases of the project, including preliminary engineering, final design, testing and start-up, and revenue service.

[52] The Amtrak Pacific Northwest Division is based in Seattle and responsible for train operations in the Northwestern United States.

During the earliest phases of the new Lakewood Subdivision project, Sound Transit developed a PHA which defined hazards present on the system using the methods outlined in Sound Transit's SSMP. In the PHA log dated April 21, 2015, Hazard No. SCR-PDB-123 identified the hazard of an overspeed derailment in all curves along the Point Defiance Bypass. In accordance with the SSMP, this hazard was determined to be unacceptable, thus requiring the following mitigations:

- Ensure curves, elevation, and speed limitations are designed according to 49 *CFR* 213.57(2), "Curves; elevation and speed limitations."
- Develop inspection and maintenance procedures according to 49 *CFR* 213.233, "Track inspection"
- Future implementation of PTC

Following this mitigation process, these mitigations lowered the frequency of the occurrence into an undesirable category that would require management to sign off on accepting the hazard.

As the Lakewood Subdivision moved closer to completion, the PTC portion of the project had been delayed. The PHA document should have been modified because PTC had not been implemented. The PHA was never updated to reflect this change. With this omission in the PHA, Sound Transit turned the project over for revenue service with minimal controlling mitigations for speed restriction at the accident curve (as required by Hazard No. SCR-PDB-123). The final safety and security verification matrix included the same mitigations that were provided in the PHA; however, the timetable had also been added as a controlling mitigation. As previously noted, Sound Transit's SSMP references "procedures and training" as the lowest protective mitigation. On the day of the accident the status of the curve hazard was marked as "Completed Accepted."

The Sound Transit Systems Integration Test Plan for the Point Defiance Bypass Project outlined a series of tests to be used to verify that all designed and constructed systems functioned in a safe and reliable manner. Completion of the Systems Integration Test Plan (SITP) was a prerequisite for issuing the safety certification of the project. Section 1.6 of the SITP included the following required tests:

- Design qualification tests
- Factory verification tests
- Construction inspection tests
- Field inspection and installation verification tests
- Acceptance tests
- Demonstration tests
- System integration tests

- System familiarization exercises
- Prerevenue operations

A noticeable omission was the description of the last and final test, prerevenue operations. Neither an operational hazard analysis nor a prerevenue operations series of tests were performed on the Lakewood Subdivision during the transition from construction to revenue service.[53] By not completing this type of review and testing, Sound Transit was unable to verify if the mitigations developed in the PHA would actually work to control the hazard under actual operating conditions.

2.5.6 Safety Certification Process (Sound Transit Internal Oversight)

As defined by the Sound Transit SSMP, the Sound Transit System Safety Certification Plan (SSCP) required the SQA to ensure that all facilities, systems equipment, safety procedures and plans, safety training programs, and emergency preparedness programs complied with safety requirements. These requirements included those mitigations developed through the hazard management process and were carried over to a certifiable items list (CIL). The CIL was used as a final verification tool to ensure that all elements have been tested and verified and served as the cornerstone of the safety certification process. Testing and verification were conducted by the SQA in coordination with the Operations Department and Design Engineering and Construction Management Department. Prior to initiating revenue service, the Chief Safety and Quality Assurance Officer certified compliance through a Safety Certification Verification Report comprised of multiple certificates of conformance that was delivered to the Sound Transit chief executive officer. The Safety Certification Verification Report and the CIL did not contain an operational hazard analysis, prerevenue operations testing, or a thorough review of the Final Safety and Security Verification Report.

When a project moves toward completion with existing open items, an exception report will accompany the CIL and certificates of conformance. This report allows for a temporary mitigation while a longer-term solution to a hazard is implemented. Sound Transit should have exercised due diligence during the safety certification process by issuing a temporary mitigation to address the hazard of an overspeed derailment at the accident location. Ideally, Sound Transit could have waited until PTC was installed before operating the Cascades service on the bypass. However, the hazard associated with the speed reduction was overlooked during the safety certification process and the mitigation was erroneously classified as “completed accepted.” The NTSB concludes that Sound Transit’s omission of the final activities of the certification process resulted in the failure to control the identified hazardous condition of an overspeed derailment at the accident curve. Therefore, the NTSB recommends that Sound Transit review its internal process for safety certification and verification, perform a gap analysis, and develop an action plan to address the deficiencies identified in the gap analysis and detailed in this report to enhance the verification activities on projects.

As a result of Sound Transit omitting the final activities of the certification process, the NTSB concludes that Sound Transit failed to implement effective mitigations in lieu of PTC to control the hazard at the accident curve. Further, the NTSB concludes that there was no

[53] Sound Transit did complete testing on all grade crossing warning devices.

requirement for WSDOT, Sound Transit, or Amtrak to provide additional protection for the accident curve.

The NTSB's May 12, 2015, accident report regarding the derailment of Amtrak train 188 near Philadelphia, Pennsylvania, discussed possible technologies that could, when PTC was not available, effectively mitigate hazards associated with engineers becoming spatially disoriented (NTSB 2016). In the Philadelphia accident, the engineer overlooked the speed restriction of an upcoming curve and derailed the train. There are similarities between the DuPont and Philadelphia accidents regarding engineers failing to recognize an upcoming curve and associated speed restrictions. In both accidents there was no active PTC in place and the physical cues for the engineers were not significant enough to alert them of the upcoming speed restriction. In the Philadelphia report, the NTSB stated, "the engineer likely would have benefitted from technology that showed him the location of his train in real time, which would have also helped him establish and maintain his situational awareness." As a result, the NTSB issued the following Safety Recommendation to the FRA:

> Require railroads to install devices and develop procedures that will help crewmembers identify their current location and display their upcoming route in territories where positive train control will not be implemented. (R-16-32)

The FRA's initial response (February 9, 2018) suggested that this recommendation required the development and testing of new technologies before it could evaluate its implementation. In order to move forward on the recommendation, the FRA planned to determine the following:

- The level of interest within the community
- If the technology would improve safety
- The cost (inclusive of other resources) necessary for deployment
- The potential benefits relative to the societal costs

On March 28, 2019, the FRA wrote that it discussed the recommendation with the Class I railroads who believed that the technology needed to satisfy the recommendation was not available, and that they did not intend to develop it. The FRA also asserted that 49 *CFR* Parts 240 and 242 already require locomotive engineers and conductors to be familiar with the physical characteristics of the territories in which they work. Under these regulations, the FRA initiated multiregional audits of the railroads, focusing on operations in nonsignaled territory.

The FRA concluded its March 28, 2019, letter saying that the need for Safety Recommendation R-16-32 was "dubious" and the costs would "certainly be tremendous, costing at least in the hundreds of millions of dollars . . .." Given that the technology does not exist, that it had "little to no known safety benefits" to offset its significant cost, and that a regulation requiring railroads to install the technology would be redundant with existing rules, the FRA did not plan to take the recommended action.

In issuing Safety Recommendation R-16-32, the NTSB believed that the recommended technology was readily available and affordable. Moving map displays that use global positioning systems (GPS) are commonly available in personal cell phones and tablets used by many people. As a result, the NTSB is concerned that both the FRA and the Class I railroads that reviewed the recommendation did not fully understand it.

Amtrak briefed NTSB investigators on May 20, 2019, on their recent development of a moving map display designed to enhance situational awareness of the train crews on their route. The application, called AWARE, monitors the position and speed of a train in real-time. Amtrak demonstrated a proof of concept in November 2018 and is working on a targeted deployment of the application on territory with a Positive Train Control Mainline Track Exclusion Addendum (MTEA) in 2019 with system-wide deployment to follow.

The NTSB believes that this recommendation is applicable to the DuPont accident. In both the Philadelphia accident and the DuPont accident, experienced engineers who were in compliance with 49 *CFR* Part 240 became disoriented. In the Philadelphia accident, a qualified and experienced engineer became spatially disoriented when his attention was diverted. The engineer in the DuPont accident knew of the speed restriction, but because he was not familiar with the territory and the approaching speed restriction, he failed to slow the train. Other human factors considerations, such as poor visibility or unexpectedly high workload, can also contribute to an engineer becoming spatially disoriented. The NTSB now understands that using readily available, low-cost technology, such as GPS and moving map displays, is a potential technology solution that the FRA did not consider. The NTSB believes that, in both the Philadelphia and DuPont accidents, this technology would have likely helped both engineers remain spatially oriented. Although the FRA and Class I railroads believe that the required technology is not available and would be expensive to develop, and that 49 *CFR* Parts 240 and 242 fully address the safety issue, despite our findings, the NTSB asks that the FRA reconsider this decision in view of the availability and cost of the actual recommended technology. The NTSB concludes that because the FRA did not act on the recommendation to add technology to assist engineers in determining their location, an opportunity to improve safety was overlooked. Consequently, Safety Recommendation R-16-32 is reiterated and is classified "Open—Unacceptable Response."

2.5.7 External Oversight of Sound Transit

Because federal and state funding was used in the development of the Point Defiance Bypass project, the FRA and WSDOT were responsible for providing oversight of Sound Transit, who was the subgrantee to the project. Although most of these oversight elements were financial in nature, both agencies were responsible for ensuring that the project would be safe to operate, and that Sound Transit's safety certification process was followed. In its contract with Sound Transit for the construction and completion of the project, WSDOT required Sound Transit to complete a Safety Security Certification Verification Report to certify that the project was "safe and ready for use in revenue operations." Although WSDOT staff ensured that the project was proceeding according to schedule and budget, their role in overseeing safety was limited. One WSDOT staff member participated in both Sound Transit's PHA activities and some testing, including grade crossing testing and validation. However, WSDOT did not have a formalized approach to oversee the implementation of Sound Transit's safety certification process, nor was

there a requirement for WSDOT to do so. The NTSB concludes that WSDOT should have provided greater oversight of Sound Transit's safety certification process.

To meet federal rail project funding requirements, the FRA required grantees to submit design plans, proposed expenditures, construction bids, and other documents required by the HSIPR Program under the ARRA. In this case, the FRA provided written approvals to WSDOT that included approvals for preliminary engineering, final design implementation, and construction stages for the bypass. Under the funding requirements, the FRA also required that WSDOT submit a System Safety Program Plan. However, the FRA is only required to review such plans, not to approve them. In this case, because the project was being constructed by Sound Transit, Sound Transit's Safety and Security Management Plan would apply. The NTSB concludes that the FRA's current requirement to review, but not approve, SSPPs does not achieve the level of safety oversight expected from the FRA.

The FRA's role in oversight of railroad funding projects is split between grant oversight and safety oversight. The policies and procedures in the grantee's or subgrantee's SSMP involving safety processes to be followed during project design, construction, and prerevenue testing are grant requirements, and the FRA Passenger Rail Division provides guidance and feedback on these safety documents. But the FRA has no regulatory authority to approve or require changes to an SSMP or the SSMP's implementation. The FRA Office of Safety (which includes the Passenger Rail Division) will in some instances perform site visits and observe prerevenue activities. In the case of the Point Defiance Bypass, the Passenger Rail Division reviewed Sound Transit's hazard management program but only as a deliverable of the grant. Although there were also 34 field and compliance inspections conducted by the FRA regional office prior to the initiation of revenue service (these included track, signal, operating practices, grade crossings, and motive power and equipment), none of these inspections noted the deficiencies that were evident during the safety certification phase of the project. Since the FRA's role in SSMP oversight is limited, the FRA was unable to ensure that mitigations to protect the accident curve in lieu of PTC were implemented. As shown in this accident, NTSB concludes that without PTC and the lack of oversight to implement mitigations, there was an increased safety risk to the traveling public. Therefore, the NTSB recommends that the FRA prohibit the operation of passenger trains on new, refurbished, or updated territories unless positive train control is implemented.

As the eventual operator of passenger rail service over the upgraded Point Defiance route, Amtrak participated in prerevenue meetings over several years that detailed the planned route, operating environment, and inherent safety hazards. Sound Transit invited Amtrak to participate in several activities related to the safety certification of the Point Defiance Bypass project, including the PHA and various tests and validations (some tests are federally mandated such as 49 *CFR* 238.111(a) which is testing to validate equipment and track and signal compatibility). However, these tests did not include the appropriate safety department at Amtrak. Amtrak's involvement in these prerevenue planning, engineering, and construction activities provided opportunities to become aware of the safety hazards and their planned mitigations, such as the use of PTC for safety protection at the 30-mph curve and the intent to use the Talgo trainsets. However, as the preparation activities progressed toward completion, Amtrak failed to make Sound Transit aware of their incomplete and inadequate safety controls. As the railroad of record, Amtrak had a duty to eliminate the risk to the lowest practicable level. For example, Amtrak accepted the use of timetable protection for the 30-mph curve, instead of the recommended PTC protection identified

in early risk analyses for the route. Moreover, Amtrak, as the railroad of record, submitted the petition to the FRA to exempt Talgo railcars, not only for the Point Defiance route but two other west coast routes, despite awareness that the railcars did not meet prevailing safety standards for crashworthiness. When asked about Amtrak's verification that the grade crossing warning devices on the Point Defiance Bypass were tested, verified, and working properly, the Amtrak general superintendent stated to investigators, "Our assumption is grade crossings work properly when the host railroad says the railroad is ready for you to operate on it." The NTSB concludes that Amtrak did not take an active enough role in reviewing safety aspects during the preparation of the Point Defiance Bypass to ensure a safe operation. The NTSB also concludes that Amtrak failed to assess, evaluate, and act upon readily identifiable safety hazards to ensure the safety of the Point Defiance Bypass for the traveling public and its own train crews. Therefore, the NTSB recommends that Amtrak incorporate all prerevenue service planning, construction, and route verification work into the scope of it's corporate-wide system safety plan, including its rules and policies, risk assessment analyses, safety assurances, and safety promotions.

Unfortunately, this accident is just one of several that have occurred recently where Amtrak has been unable to control or influence the management of safety on the host railroad.

On October 5, 2015, at 10:22 a.m. eastern daylight time, southbound Amtrak train 55, derailed at MP 65.2 on a single main track after striking a rock pile that fouled the right of way on the New England Central Railroad (NECR) near Northfield, Vermont (NTSB 2017a). The collision and subsequent derailment resulted in the locomotive and first coach railcar derailing and sliding down an embankment. Three additional coach railcars derailed but remained upright and in-line near the track. This accident highlighted that although Amtrak used a hazard management program on its owned and operated territory through its System Safety Program Plan (SSPP), this program was not applicable on a host railroad. The Amtrak SSPP hazard management program established a methodology for determining risk and the mitigation of this risk; the risks addressed by Amtrak included rock fall and rock slide areas along the Northeast Corridor and Harrisburg Line. In contrast, although the NECR had a safety program, at the time of the accident the NECR did not have a formalized hazard management and assessment program as it pertains to rock fall risk management and mitigation.

On March 14, 2016, at 12:02 a.m. central daylight time, Amtrak train 4 derailed near MP 372.9 in the vicinity of Cimarron, Kansas (NTSB 2017b). This Los Angeles to Chicago train consisted of two locomotives and ten railcars. Four railcars were derailed on their sides, one railcar derailed and was leaning, two railcars derailed upright, and one railcar derailed a single truck. The accident occurred on the BNSF Railway. A runaway feed truck from an adjacent feedlot impacted the railroad tracks and pushed the tracks out of alignment. At the location of the accident, there were no protective barriers or fencing placed along the right of way to prevent this undesirable intrusion. Along the Amtrak-owned and -operated Northeast Corridor and Harrisburg line, Amtrak implemented an intrusion prevention strategy to develop standards and install fencing and barriers to reduce the risk of vehicle intrusion onto the right of way.[54] Amtrak does not require the same risk reduction strategies from its hosts.

[54] Amtrak Intrusion Prevention on the NEC Presentation, November 16, 2015.

On February 4, 2018, about 2:27 a.m. eastern standard time, southbound Amtrak train 91, operating on a track warrant, diverted from the main track through a hand-thrown switch into a siding and collided head-on with stationary CSX Transportation (CSX) local freight train F777 03. The accident occurred on the CSX Columbia Subdivision in Cayce, South Carolina (NTSB 2018b). The engineer and conductor of the Amtrak train died as a result of the collision. At least 92 passengers and crewmembers on the Amtrak train were transported to medical facilities. Although this accident is still under investigation, preliminary information from the investigation suggests that the Amtrak train was authorized to operate through the territory at maximum authorized speed during a signal outage.[55] This differs from the current operating plan that Amtrak uses during planned signal outages and unplanned signal outages on their own property.

During the NTSB investigative hearing on this accident, Amtrak officials discussed the use of host railroads to operate the majority of route miles of Amtrak services across the United States. Amtrak uses a Host Railroad Agreement to gain access to the host's right of way and to define the fee structure paid for such access. As discussed during the hearing, the Amtrak Host Railroads Team said that the team infrequently discussed safety issues and that it was unclear the extent to which safety provisions were contained in the host railroad agreements.

These accidents highlight that there is inconsistency in the approach to managing safety on Amtrak-owned and -operated territory versus that of a host's territory. Amtrak relies on host railroads to meet the minimum federal safety standards to ensure safe operations of Amtrak trains. However, on its own territory, Amtrak aims to meet and exceed these standards by not only meeting the minimum safety standards required by federal regulation, but also historically using a System Safety Program Plan, not required federal regulations, and more recently after a recommendation from the NTSB, implement a safety management system (SMS). The effort to develop and implement an SMS at Amtrak will enhance the management of safety across the system but it may be more challenging to implement on a host railroad. These enhancements will go beyond the current minimum standards used by the host railroads. The NTSB concludes that to improve safety for the public, Amtrak needs to implement an SMS on all of its operations whether internal, host railroad, or in states that own infrastructure over which Amtrak operates. Therefore, the NTSB recommends that Amtrak work collaboratively with all host railroads and states that own infrastructure over which you operate in an effort to develop a comprehensive safety management system program that meets or exceeds the pending FRA regulation 49 *CFR* Part 270, "System Safety Program."

On April 3, 2016, about 7:50 a.m. eastern daylight time, southbound Amtrak train 89 struck and killed a worker inside a backhoe at MP 15.7 near Chester, Pennsylvania (NTSB 2017). As a result of this investigation, the NTSB identified the need for Amtrak to implement a formal System Safety Program, and issued recommendations to Amtrak to take this action. One of the challenges faced by all railroads in developing a formal System Safety Program, has been the failure of the FRA to enact its final rule. Many of the railroads have designed their System Safety Program but are apprehensive about implementing their plan because of concerns that modifications will be necessary after the System Safety Program regulation is fully enacted. At the time of the NTSB's

[55] A train operating through a signal outage does not rely on wayside or cab signaling receive movement authority through the territory, in this case movement authority was authorized by the CSX dispatcher.

report on the accident in Chester, the FRA had delayed the rule's implementation four times. As a result, the NTSB issued Safety Recommendation R-17-17 to the FRA:

> Enact Title 49 *Code of Federal Regulations* Part 270, "System Safety Program," without further delay. (R-17-17)

In the 2 1/2 years since the final rule was published, the FRA has granted six extensions that have delayed this rule until its currently scheduled effective date of September 4, 2019. In the years since the rule was published, accidents have continued to occur. In addition to the accident near Chester, Pennsylvania, and the accident in DuPont, Washington, the NTSB is also investigating the February 4, 2018, accident involving Amtrak train 91, which diverted from the main track through a hand-thrown switch into a siding and collided head-on with a stationary CSX Transportation freight train in Cayce, South Carolina (NTSB 2018b). The engineer and conductor of that Amtrak train died, and 92 passengers and crewmembers were transported to medical facilities. On April 22, 2019, pending implementation of the final rule, Safety Recommendation R-17-17 was classified "Open—Unacceptable Response." The Chester accident occurred on Amtrak's own property. As shown by this accident and others, Amtrak operates on host railroads throughout the United States. The system safety regulation would not be limited to Amtrak property and would be applicable to all of Amtrak's operations including those on host railroads. With the regulation in place, the relationship between the host railroad and Amtrak would be better defined and Amtrak could present to the host railroads their regulatory obligations. The NTSB concludes that the repeated postponement of 49 *CFR* Part 270, "System Safety Program," has delayed needed safety improvements for the passenger rail industry, rail employees, and the traveling public. Therefore, the NTSB reiterates Safety Recommendation R-17-17.

NTSB investigators learned that following this accident, Amtrak officials developed a risk assessment process to be used to evaluate the risks to Amtrak operations over a new or upgraded service. The process includes using expertise from Amtrak's System Safety Office and local transportation management officials. Since its development, this risk assessment process has been used several times by Amtrak including on the return of service to the Point Defiance Bypass. Amtrak operations and safety officials stated to investigators during interviews that Amtrak will mature its risk assessment process and use it on all new or upgraded future services. The NTSB concludes that the use of risk assessments to identify, mitigate, and control risk on new and upgraded service will increase the level of safety to Amtrak operations over all territories. Therefore, the NTSB recommends that Amtrak conduct risk assessments on all new or upgraded services that occur on Amtrak-owned territory, host railroads, or in states that own infrastructure over which you operate.

2.6 Equipment Crashworthiness

When the leading locomotive and the Talgo Series VI trainset derailed, they were immediately subjected to a severe longitudinal load and a bending moment as a result of the sudden deceleration in the sharp curve.[56] The sudden deceleration was a direct result of the train's interaction with the surrounding environment, such as soil and ballast foundation of the track

[56] This was an 8° 22-minute curve.

structure, bridge structures, the jackknifed trainset railcars, and trees. The forces associated with the derailment and the bending moment caused the leading locomotive to separate from the first railcar in the trainset and several of the articulated connections of the trainset to fracture, triggering the separation of passenger railcars. In this derailment, a total of six articulated connections failed. The locomotive and derailing railcars were then exposed to secondary collisions after they derailed from the tracks. The outcome from many of those secondary collisions resulted in the catastrophic failure of passenger railcar body structures because of the complex and uncontrolled movement of passenger cars, which led to the loss of survivable space, side passenger window failures, several passenger ejections, injuries, and three fatalities.

AMTK 7424 (8) and AMTK 7504 (7) were those passenger railcars in the trainset that suffered the most severe compromise of their railcar-body structures. AMTK 7424 (8) traveled off the overpass to the southeast (compass direction) with its leading end directed toward the adjacent bridge embankment. The railcar then nosed downward, upended, and overturned end-over-end, resting on its roof where it then struck a truck trailer traveling on I-5. Overall, the secondary collisions and interactions with the surrounding environment resulted in about 30 percent of the right sidewall shearing from the side sill and roof line. The roof was split and opened from the suspended end to about the center of the railcar. Four of five right-side passenger windows were missing as a result of the secondary collisions. The end wall structure of the suspended end of AMTK 7424 (8) was completely separated from the end frame structure as a result of its interaction with the truck and trailer collision and other secondary collisions as it fell from the embankment. The left-side wall of AMTK 7424 (8) was heavily scraped and abraded but remained intact. The structure was slightly pushed inward from the suspended end to the approximate center of the railcar. The roof line from the suspended end to the approximate center of the railcar-end was fractured and slightly pushed inward. Four of five left-side windows were missing, likely due to the collision. In total, there were 11 passengers traveling in this railcar; of these, 5 were ejected, and a total of 10 were injured, and 4 of the injuries were deemed severe. The NTSB concludes the Talgo Series VI passenger railcar AMTK 7424 (8) did not provide adequate occupant protection after its articulated connections separated, resulting in complex, uncontrolled movements and secondary collisions with the surrounding environment which led to damage so severe to the railcar body structure, that it caused passenger ejections.

The unique design of the Talgo Series VI trainset rolling assembly and its vulnerability to detachment further contributed to the severity of secondary collisions. The observations in this derailment demonstrated that the rolling assembly is prone to separation when the trainset's articulated connection fails. In this derailment, five rolling assemblies fully detached, and one partially detached. One fully detached rolling assembly was involved in a secondary collision with a separated Talgo Series VI passenger railcar resulting in the three fatalities. Passenger railcar AMTK 7504 (7) struck the rolling assembly from AMTK 7422 (10) during the secondary collisions after the derailment whereupon the railcar structure of AMTK 7504 (7) was severely compromised. The Talgo Series VI trainset rolling assemblies are susceptible to detachment when the articulated connections fail in a high-energy derailment or collision. Based on the examination of the postaccident damage, photographic documentation collected by the Federal Bureau of Investigation Evidence Response Team and the location of the human remains prior to the northeast bridge abutment that passed over the lanes of southbound I-5, AMTK 7504 (7) collided with the detached rolling assembly from AMTK 7422 (10) after the articulated connections failed on both railcars, thereby resulting in the rolling assembly physically penetrating AMTK 7504 (7).

The three fatalities that occurred in AMTK 7504 (7) were all the result of blunt force trauma. Two of the fatally injured passengers were ejected from the compromised railcar-body structure of AMTK 7504 (7) when the side wall of the railcar was breached by the rolling assembly from AMTK 7422 (10). The rolling assembly tore a hole into the underside of the railcar as it flipped over onto its right side during the derailment. The rolling assembly was found partially inside of the railcar. In addition, two more passengers were partially ejected out of the opening created by the railcar's structural breach. Another passenger was fatally injured when he was struck by the rolling assembly inside of the railcar. The NTSB concludes that the failure of the articulated connections of both Talgo Series VI passenger railcars AMTK 7422 (10) and AMTK 7504 (7), the detached rolling assembly from AMTK 7422 (10) and its secondary collision with AMTK 7504 (7) directly resulted in three fatalities and two partially ejected passengers who had been traveling in AMTK 7504 (7).

The rolling assembly of AMTK 7424 (8) detached during the derailment and traveled across the southbound lanes of I-5. A green Kia Soul and a black Jeep Grand Cherokee were struck by the rolling assembly which weighed about 4,500 pounds. The rolling assembly struck the front hood of the Kia and the rear of the Jeep, causing both drivers to lose control of their vehicles. Both vehicles sustained extensive crush damage resulting from the impact with the rolling assembly. The driver of the Kia was injured and pinned inside of the vehicle when the engine block was shoved rearward, collapsing the dashboard and steering column onto the driver. The driver had to be extricated by first responders. After being struck by the rolling assembly, the Jeep then rotated 180°, striking the metal guardrail before coming to final rest. The Jeep occupant also received minor injuries in the accident.

The grandfathering provision approved by the FRA (discussed in further detail in section 2.6.2 of this report) allowed the use of the Talgo Series VI trainset subject to the condition (one of several conditions that were required to be met) that the railcars must be modified by applying safety cables between the railcars and bogies (truck assemblies) to resist a minimum total longitudinal force of 77,162 pounds to prevent separation of the railcar-bodies and rolling assemblies. The NTSB learned the limit of the force was constrained because any greater force would compromise the end-wall structure of the railcars. This addition was required because the original design of the rolling assembly was primarily held in place by guidance arms and the FRA was concerned the rolling assembly could detach during an accident. Examination of the postaccident performance of the modification showed there was a high percentage of failure of the cables. The cables installed were, in fact, not cables; they were lightweight high-strength polyester straps. When the term "cable" is used in manufacturing and design industry, it is associated with a steel braided material, not a polyester material. Although similar strength is achievable with nylon materials, nylon has a life expectancy associated with it. Nylon and polyester straps possess a limited useful outdoor service life due to degradation caused by abrasion, exposure to natural elements, temperature gradients, and exposure to sunlight or other measurable sources of ultraviolet radiation. An industry best practice, at a minimum, would require that polyester straps regularly exposed to outdoor conditions be identified with the date they are placed into service and be periodically proof tested to their rated capacity. The investigation determined, through communication with Talgo, that there was no maintenance or design specification that established

either periodic proof testing or a prescribed service life of the strap.[57] In other words, there were no measurable inspection requirements beyond a periodic visual assessment and no established service life to specify how long the strap would be expected to meet the design expectations before environmental degradations would occur and the strap was no longer capable of meeting the strength requirements. The NTSB tensile tested several samples of straps collected from the accident trainset and exemplar straps from another Talgo Series VI trainset currently in service. The results determined that the individual straps that were tested fractured at tension loads that were about 10 to 50 percent of the rated tension breaking strength. The NTSB concludes that the safety straps used for the Talgo Series VI trainset rolling assembly retention modifications were degraded due to their use in exposed outdoor conditions and were used far past their service life. In its examination of the proposed modifications during the grandfathering approval process, the FRA neglected to consider that the high strength polyester fabric strap would degrade and become weaker over time. Had the FRA considered that this type of manufactured material degrades over time, they could have either established maintenance requirements to both periodically test and change the straps at intervals or required the use of a steel braided cable with an effective life of 20 years. The NTSB concludes that during the grandfathering approval process, the FRA failed to consider the limited useful service life of the polyester straps used for the Talgo Series VI trainset rolling assembly retention modifications which had degraded and failed to improve the crashworthiness of the train.

2.6.1 Historical and Regulatory Approach to Crashworthiness

The NTSB has investigated several accidents in its history where the issue of crashworthiness performance of rail passenger vehicles involved in secondary collisions contributed to the overall severity of the accident. On January 26, 2005, the NTSB launched a team to Glendale, California, to investigate a collision between a Metrolink commuter train and a highway passenger vehicle.[58] The northbound Metrolink train struck an unoccupied sport-utility vehicle on the track. The train derailed and impacted a standing freight train and jackknifed into a northbound train. There were 11 fatalities and more than 100 injuries as a result of this accident. Although the NTSB closed this investigation due to a criminal investigation associated with the driver of the sport-utility vehicle, the derailment prompted the FRA and Volpe to examine the crashworthiness of the rail vehicles involved in this accident. In its report, Volpe stated that despite the complex motions of passenger [railcars] involved [in this accident], the principle causal mechanism for the fatalities and serious injuries in the Glendale accident was the loss of survival space due to the gross deformation of the railcar structure. In other words, the secondary collisions with nearby trains after the initial impact with the sport-utility vehicle were the impetus of the railcar-body failures.[59]

As mentioned in section 1.11.5 of this report, as a safety requirement, all passenger railcars that operate in the United States must have corner and collision posts. The derailment and

[57] Talgo explained to NTSB investigators they performed an exterior calendar day mechanical inspection of passenger equipment required by 49 *CFR* 238.303 "Exterior calendar day mechanical inspection of passenger equipment," prior to the accident, but now specifically includes inspection of safety straps.

[58] Closeout memorandum, NTSB Docket DCA05MR009.

[59] Proceedings of the ASME/ASCE/IEEE 2011 Joint Rail Conference, JRC2011, March 16-18, 2011, Pueblo, Colorado, USA; Crashworthiness Analysis of the January 26, 2005, Glendale, California, Rail Collision.

subsequent collision of two Metro-North trains on May 17, 2013, demonstrate the need and benefit to passengers traveling in passenger trains with these features. The eastbound Metro-North passenger train derailed from main track 4 of the New Haven line subdivision near Bridgeport, Connecticut, and was struck by a westbound Metro-North passenger train that was traveling on an adjacent track. As a result of the collision, 62 passengers, 2 engineers, and 1 conductor were injured (NTSB 2014). After the eastbound train derailed, it was struck and sideswiped by the westbound train. In an examination of the crashworthiness performance of the railcars involved, the NTSB found that a structural corner post of one of the severely deformed railcars did provide a measurable level protection, but in its investigation, the NTSB determined that the corner post did not meet federal structural requirements. This example is relevant for two reasons, (1) the Talgo Series VI passenger cars do not have corner or collision posts and (2) like in many derailments, trains often enter the adjacent track and can be subjected to secondary collisions from another train.

The approach to crashworthiness in the United States historically has focused on the static end strength of the individual train railcars and locomotives. In May 1999, the FRA published a final rule requiring improved crashworthiness standards that included structural enhancements to the railcar body such as collision posts, corner posts, anticlimbing mechanisms, mechanical coupler strength requirements, and truck to railcar-body attachment requirements. The basis of this approach was to protect occupants from the loss of survivable space during a collision by strengthening the railcar structure and prevent railcar-to-railcar overrides when a collision occurs. In the 1999 final rule the FRA stated that it was concerned with the level of safety by passenger equipment designed to European and other international standards when such equipment is operated in the United States. The FRA stated (at the time of publication) that overall trainsets in Europe did not meet the structural standards common in the United States, and the FRA believed that the adherence to such standards by the United States had contributed to a high level of safety. Codifying these standards was the FRA's approach to assure that a high level of safety was guaranteed when operating passenger trains in the comingled environment with heavy freight trains and numerous grade crossings, specifically if the European trainset becomes desired for use in the United States. Recently the FRA published a final rule (effective January 22, 2019) that amends passenger equipment safety standards allowing the use of a performance-based approach to crashworthiness design. Specific to Tier I trains (trains that operate at a maximum speed of 125 mph) the final rule establishes an alternative approach to meeting crashworthiness so that features like crash energy management can be used on a performance basis rather than the prescriptive requirements currently in use (*Federal Register* 2018, 25020).

The concept of the trainset is not unique in Europe and internationally.[60] From a crashworthiness perspective, and as is the case with the Talgo Series VI operating in the United States, the operating approach of the trainset places unoccupied railcars (equipment railcar and baggage railcar) at each end of the trainset. Then a locomotive or cab railcar is used to operate the train. The individual railcars in the trainset are constructed to resist a longitudinal static load of about 450,000 pounds, which is significantly less than the United States requirement of

[60] A semipermanent trainset is one in which cars are coupled through an articulated connection. This connection cannot be traditionally uncoupled like traditional North American mechanical couplers. The trainset is retained in its configuration unless special tools are used by qualified mechanics in a facility.

800,000 pounds. In addition, except for the equipment railcar, there are no corner or collision posts as part of the structural design of the individual passenger railcars, unlike the United States requirements which require all passenger railcars that operate in North America to have full height corner and collision posts.[61] The only excepted railcars are those which had been grandfathered to operate in the United States by the FRA. It should be noted that the Talgo Series VI is the only passenger railcar that received grandfathered approval by the FRA that operates in the United States. According to the analyses presented to the FRA from Amtrak and Volpe, it had been theorized that the presence of unoccupied railcars would provide a level of protection at each end of the trainset in a train-to-train collision. The theory is that the initial energy from the collision forces would be absorbed by the unoccupied railcars thus protecting the occupants traveling in the center section of the trainset. This approach fails to consider two key risks: (1) the analysis presented to the FRA for grandfathered approval considered only train-to-train collisions with similar types of trains, not freight trains which can weigh more than 10,000 tons versus the weight of the accident train at 461 tons, and (2) the risks associated with secondary collisions from the surrounding environment that often is associated with the train departing the track and colliding with adjacent trains (raking collisions) and trainset buckling (jackknifing) and/or individual railcar separation due to railcar-to-railcar connection failures.

In the DuPont, Washington, derailment, several articulated connections failed in a way that was predicted by the FRA and Volpe as discussed in the FRA's final approval to grandfather the Talgo Series VI trainset. Several individual railcars in the trainset separated whereby the passenger-occupied railcar structures with their deficient end-strength design and no corner or collision posts were fully exposed to all surrounding environmental risks. Had this accident occurred on double track territory and another passenger railcar or fully loaded freight railcar collided with these railcars such as in the 2005 Glendale, California, accident, the accident outcome would have resulted in significantly more loss of survivable space. In the 2013 Bridgeport, Connecticut, accident, the NTSB observed that the corner posts provided measurable protections against the loss of occupied space (NTSB 2014). If this type of accident had occurred with a Talgo trainset in which the individual passenger cars did not have corner posts, the outcome would have resulted in a significant loss of survivable space. The Vancouver, British Columbia, derailment occurred with the train traveling at only 3 mph when it derailed into an adjacent freight car tearing into the side structure of Talgo Series VI passenger cars. Had this accident occurred at speeds like the Dupont, Washington, derailment, the outcome would have resulted in a significant loss of survivable space.

The demonstrated behavior of the Talgo Series VI trainset derailments and the behaviors of railcars in many other derailments and collisions investigated by the NTSB provide a substantial and conclusive basis to predict postevent outcomes of railcars during an accident. In a severe or high-energy accident, the railcars often depart from the tracks and into adjacent surroundings. The physics of the sudden deceleration of the train during a derailment or collision and the following forces from the trailing railcars are the dominant contributor to this behavior, which typically results in jack-knifed individual railcars. The railcars are then exposed to the surrounding environment which can include, nearby trains, automobiles, and rigid wayside structures. The crashworthiness of the individual railcars must be able to resist, to some degree, the crush that they

[61] A recent Notice of Proposed Rulemaking proposed new recommendations for the Tier I passenger equipment and allows for alternate compliance in 49 *CFR* Part 238.

will be exposed to from secondary collisions. Since 1999 in the United States, crashworthiness requirements that include the end-strength of 800,000 pounds, corner and collision posts, and other structural minimums have been mandatory. The benefit of having these required structural features on all railcars has improved safety for passengers, specifically when there has been an accident and the railcars depart the tracks into adjacent track or other environmental features that can lead to catastrophic failure. Based on the failed articulated connections, the lack of United States-compliant structural protections of the Talgo Series VI railcar-body, and the demonstrated behavior of the trainset in a derailment, the NTSB concludes that the Talgo Series VI trainset is structurally vulnerable if it is involved in a high-energy derailment or collision due to its lack of crashworthiness protections and is at risk to severe and catastrophic loss of survivable space.

2.6.2 Grandfathering

Title 49 *CFR* 238.203(d), "Grandfathering of Non-Compliant Equipment for Use on a Specified Rail Line or Lines," provides a provision for a railroad to petition the FRA to permit the use of rail equipment not meeting the then-newly published requirements for static end strength. The petitions submitted were required to include (summarized):

- Detailed drawings and material specifications, engineering analysis sufficient to describe the performance of the static end strength and its performance in a collision
- Risk mitigation efforts employed in connection with the use of the equipment
- A quantitative risk assessment demonstrating the use of the equipment in the service environment it would be operated in, in the public interest, consistent with railroad safety

On September 8, 2000, the FRA determined there was enough information submitted to establish that the five Talgo Series VI trainsets could be operated consistent with railroad safety in the Pacific Northwest Corridor at speeds up to 79 mph subject to specific conditions tied to the review and approval of the train control system. The trainsets and their predecessors (according to the FRA) had operated without incident on this corridor since 1994. FRA further concluded that the trainsets could also be operated in the public interest and consistent with railroad safety on the Los Angeles-Las Vegas route at speeds up to 79 mph.

Amtrak and Volpe had provided and developed information to characterize the crashworthiness of the trainsets under the conditions specified. However, given the uncertainty related to the crash analysis, risk assessment, and other issues discussed above, the FRA determined that the conditions attached to their approval would be necessary to secure a reasonable level of confidence that safety would not be compromised.

Final approval was granted by the FRA on March 27, 2009, for the operation of 67 Talgo Series VI railcars (five trainsets) having met the conditions discussed above along with the following conditions (summarized):

- Restricted to operations between Eugene, Oregon, and the United States/Canadian border near Blaine, Washington, and the route between Los Angeles, California, and Las Vegas, Nevada.

- Operations on the Pacific Northwest Corridor were authorized, consistent with other railroad safety regulations (including 49 *CFR* 213.345, "Vehicle/track system qualification") only upon acceptance by the Associate Administrator for Railroad Safety/Chief Safety Officer of plans for, and installation of, a train control system meeting the requirements of 49 *CFR* Part 236, "Rules, Standards, and Instructions (*Federal Register*, 2016, 88060)."

2.6.3 Investigative Hearing

The NTSB conducted an investigative hearing on July 10-11, 2018. One area of focus during the hearing was the grandfathered use of the Talgo Series VI trainset. Representatives from the FRA, Amtrak, and WSDOT provided expert witness testimony and responded to questions from investigators. NTSB investigators wanted to understand if the FRA and Amtrak were concerned about the performance of the Talgo Series VI trainset based on the recent evidence of how it performed in the DuPont, Washington, accident, and whether the FRA had interest to re-examine its decision to grandfather this equipment. The FRA responded by stating it saw no reason to reconsider the petition because the items that were covered by the grandfathering agreement performed adequately. This assertion is contrary to what NTSB investigators found during the investigation. The NTSB found the items covered by the grandfathering agreement did not perform adequately. One such item covered by the agreement was the rolling assembly retention modification. As discussed earlier, the grandfathering agreement granted by the FRA allowed the use of the Talgo Series VI subject to the condition that the railcars were modified by applying safety cables between the railcars and bogies (truck assemblies) to resist a minimum total longitudinal force of 77,162 pounds to resist separation of the railcar bodies and rolling assemblies. This was required because the original design of the rolling assembly between the suspended and supported ends of the railcars was primarily held in place by guidance arms and the FRA was concerned the rolling assembly could detach during an accident if the railcars came apart.

In this accident five rolling assemblies fully detached, one partially detached and two of the detached rolling assemblies were known to be involved in secondary collisions that resulted in injury and three deaths. On a Talgo Series VI trainset consisting of 12 railcars, (excluded for this discussion are the lead and trailing locomotive) there are 11 rolling assemblies that reside between the supported and suspended railcars. Five fully detached rolling assemblies represent a failure rate of 45 percent. The NTSB considers a failure rate of this magnitude an unacceptable risk to passenger safety. The FRA understood the risk of the Talgo Series VI trainset rolling assemblies that could separate during an accident by requiring the modification as a condition to be grandfathered. The performance of this modification in this accident demonstrates the modification was not successful and the FRA should have serious concerns about the continued use of this trainset. The FRA granted grandfathered approval of the Talgo Series VI trainset based on several conditions, including the modification of the rolling assemblies to resist separation. Should one of those conditions not be met, then the trainset no longer meets the terms of the approved agreement. Based on the degraded conditions of the rolling assembly safety straps, the

NTSB concludes that the Talgo Series VI trainset designated as Amtrak train 501 was not in compliance with the terms and conditions of the FRA's grandfathering agreement.

Amtrak's expert witness responded to NTSB's question during the hearing regarding its concern with continued use of the Talgo Series VI trainset from a safety perspective based on its performance in this accident by stating they would provide their response later. As of the date of this report, no response has been provided from Amtrak.

A grandfather clause is an exemption that allows a design or a system to continue in operation that was in use before the implementation of new rules, regulations, or laws. The grandfathered system becomes exempt to specific requirements while all other designs or operations must abide by the new rules. Depending on specific circumstances, grandfather clauses can be implemented in perpetuity, for a specified amount of time, or with specific limitations. Regarding the grandfathered approval of the Talgo Series VI trainset, the FRA told investigators in the investigative hearing that the FRA's approval will remain in place for the life of the equipment.

The NTSB is concerned that the use of a grandfathering clause for public transportation systems that do not conform to specific regulatory requirements intended to provide a minimum level of safety exposes the public to unnecessary risk. In the case of the Talgo Series VI trainset, the grandfathering approval granted by the FRA was based on: an engineering analysis sufficient to describe the performance of the static end-strength and its performance in a collision; risk mitigation efforts employed in connection with the use of the equipment; and a quantitative risk assessment demonstrating the use of the equipment in the service environment it would be operated in, was in the public interest, and was consistent with railroad safety. The approach outlined is logical in that the elements provide measurable results that allow one to consider the many risks that could manifest into significant safety failures, however, in the case of the Talgo Series VI not all risks were considered. A reasonable approach would consider the most likely risks associated with the design in the environment in which it is used. As discussed above, not all risks were considered, such as collisions with freight trains and the service life of a risk mitigating modification. In the case of the Talgo Series VI, the analysis and risk assessments were completed, mitigating strategies were implemented, and the grandfather application was approved but no consideration was undertaken for continued monitoring of the existing risk or risks that might develop with aging of the mitigation measures.

There are no regulatory factors in the grandfathering provision that allow the FRA to continuously monitor the grandfathered system that was required to contain several mitigating modifications. However, nothing prohibited the FRA from monitoring under its existing authority. Based on testimony during NTSB's investigative hearing, the Talgo Series VI trainset is the only train in the United States that has an approved grandfathered agreement that allows it to operate with railcar-body end-strength that does not meet United States requirements. The NTSB concludes that allowing the grandfathering provision to remain in 49 *CFR* 238.203(d), "Grandfathering of noncompliant equipment for use on a specified rail line or lines," is an unnecessary risk that is not in the public interest nor consistent with railroad safety. Therefore, the NTSB recommends that the FRA remove the grandfathering provision within 49 *CFR* 238.206(d) and require all railcars comply with the applicable current safety standards.

2.6.4 Design Life of Talgo Series VI

The NTSB questioned both the FRA and WSDOT during the investigative hearing that took place on July 10-11, 2018, about the design life of the Talgo Series VI trainset. The FRA expert witness responded that the design life is between 25 and 30 years. When asked what dictates the lifespan of a railcar, the FRA indicated there were commercial considerations and material fatigue considerations.

Aluminum railcars differ in performance, according to the FRA. Compared to carbon steel, aluminum can be more susceptible to accumulating fatigue damage such as cracks in the structure to a point that it is no longer economical to continue in service. The NTSB is aware that designers must consider the useful life differences in material properties between carbon steel versus aluminum, specifically fatigue life. In fact, high-strength aluminum is subject to fatigue failures more readily than mild steel at comparable stress levels. In the case of alloyed aluminum, fatigue life is considered more carefully for some designs and more importantly, wherever there will be vibration, and high stress points.

The Talgo Series VI trainset did experience fatigue failures early in its lifecycle. During its investigation, the NTSB learned about four instances of railcar-body cracking "fissures" that were discovered with the Talgo Series VI trainsets. Records indicate that in August 2005, just 7 years after the trainset entered service, the railcar-body structures started to fail. The fissures first appeared on the supported end of the railcars where the rolling assembly towers connected to the end frame. During service life, the fissures continued to appear at other locations on the trainset. The other location was near the structural area on the end of the railcar where the articulated couplers are attached. In all found cases, mitigating repairs were made to stop the fissures from propagating and maintain the structures' intended purpose. This also required increased periodic inspections involving Talgo, Amtrak, WSDOT and the FRA. The inspections required contract modifications to fund the inspections and added to the existing maintenance cycle. These special fissure inspection efforts are expected to continue while the trainsets remain in service.

In a recent inspection that took place in February 2019, the FRA reported that three railcars from the Mount Olympus trainset were found with new fissures. These newly discovered fissures will require additional maintenance mitigation action to prevent further propagation. This trainset was the trainset involved in the December 17, 2018, derailment in Vancouver. During the NTSB's examination of this trainset, the fissure inspection was completed by Amtrak personnel with no new fissures identified.

During the NTSB's investigative hearing, the expert witness from WSDOT responded to questions about the operating life of the Talgo Series VI trainset. He referred to a fleet management plan that considered the design life of the Talgo Series VI trainset. Within the plan, he explained there are replacement options proposed based on a design life of 20 to 25 years.

2.6.5 WSDOT's Fleet Management Plan

The NTSB obtained a copy of WSDOT's fleet management plan. In it, the plan describes WSDOT's collaborative effort between WSDOT and ODOT to address future equipment needs and identifies investment strategies. It documents how demands for Amtrak Cascades equipment

and maintenance facilities were being met when the plan was initially developed and how they would be addressed once major federally funded infrastructure improvements were completed in 2017, as well as what equipment and maintenance needs must be met through the year 2037 to ensure the continued growth of the Pacific Northwest's intercity passenger rail system.

The plan included a life-cycle analysis that predicted an optimum life of the trainset based on economic factors such as annual maintenance costs, overhauls, and the availability of financing for fleet replacement. The analysis does not have any consideration for the engineering limits of the design life of the Talgo trainset nor any considerations to provide safe reliable transportation that is in the public's interest. One could make the argument that overhauls could serve as the basis for consideration of engineering design limits or safety, when it comes to a railcar-body that develops fissures during its lifecycle and the increasing costs associated with mitigations. The NTSB recognizes the economic realities for owning, operating, and planning for future transportation needs but these economic interests must be equally balanced with the safe operation of the system to include procuring equipment that meets or exceeds the current passenger safety standards in the United States.

A representative from WSDOT testified at the NTSB investigative hearing on this accident that the average service life of the Talgo trainsets is between 20-25 years. This statement is also included in WSDOT's Fleet Management plan. This confirms that WSDOT is currently operating a trainset that is at or near the end of its useful life—a trainset that lacks structural protections and does not meet United States standards. WSDOT is now aware and continues to operate a Talgo Series VI trainset design that does not provide adequate protection to passengers in the event of a high-energy derailment or collision. After an overall evaluation of this trainset design, the NTSB concludes the Talgo Series VI trainset does not meet current United States safety standards and poses unnecessary risks to railroad passenger safety when involved in a derailment or collision. Therefore, the NTSB recommends that WSDOT discontinue the use of the Talgo Series VI trainsets as soon as possible and replace them with passenger railroad equipment that meets all current United States safety requirements.

2.6.6 Lead Locomotive

There were no visual separations of the corner and collision posts, or visual separations or ruptures of the welded seams. Both side-entry doors of the engineer's cab and the machine room access door were operable. The underframe was locally deformed, but the structural condition was intact. The CEM in the front and rear coupler was not activated. Both trucks and their retention mechanisms remained intact and attached to the locomotive. The fuel tank and the fuel tank inlet were not compromised because of this derailment. The right side of the locomotive exhibited nonstructural compromising sidewall damage consistent with the locomotive being on its side.

The operating cab windshield was destroyed; however, the laminated safety glass feature prevented the shattered glass from separating into pieces. Damage to the interior of the operating cab was constrained primarily to the leading end, most notably at and above the front glazing (windshield). The vertical space of the cab interior was reduced to about 19 inches between the operator's desk and the ceiling, and to 66 inches from the floor to the ceiling. The height above the seats was reduced to 66.5 inches.

This investigation determined locomotive WTDX 1402 (1) was constructed to meet crashworthiness standards as prescribed by FRA regulations and AAR standards. The NTSB concludes that the lead locomotive's crashworthiness design and CEM features minimized the severity for injuries and fatalities to the train crew by performing as intended in this accident.

2.7 Survival Factors

The survival factors investigation focused on issues relating to passenger injuries, the postaccident evacuation process, and emergency response communications. The analysis will discuss the unintentional rotation of the train seats that led to passenger injury and the reduction in the available egress space. The rotation of the train seats also compromised the occupant protection afforded by compartmentalization by allowing occupants to travel farther within the train railcar, thus increasing the likelihood of injury. In addition, the analysis focused on the difficulties encountered by the passengers during the postaccident evacuation caused by the lack of emergency lighting and the lack of the required HPPL material in the signage regarding exit controls and manual release levers. Lastly, the investigation examined the communication operations of the emergency responders and the issues related to the lack of interoperability between the communications systems for the responding agencies.

2.7.1 Emergency Lighting

After the derailment, the interior of the railcars lost all power. This forced passengers to make their way through the darkened railcars to egress points. The ambient lighting was insufficient to assist the passengers as they attempted to evacuate the train. Use of egress points and emergency exits were hampered by the lack of emergency lighting. Passengers were unable to read instructional signs that provided information regarding the operation of exit controls and manual release levers. In several instances, the passengers were unable to properly manipulate the exit controls which delayed their escape from the railcar. The lack of lighting added to the confusion and the difficulty in evacuating the railcar.

First responders reported that the lack of lighting complicated the rescue efforts. First responders inadvertently walked over victims lying on the floor because of the inability to see them. The lack of lighting made it difficult for emergency responders to see and avoid obstacles and other dangers in the damaged railcars. The Talgo trainset does not possess adequate emergency lighting in the event of the railcars separating in an accident. The batteries are located at the front of the train in the power railcar, and in the baggage railcar, located to the rear. Separation of the railcars, as occurred in this derailment, causes a disruption in the power to all the railcars. The NTSB concludes that after the Talgo trainset separated from the power cars, there was no power to the train for emergency lighting which hampered the ability of passengers to evacuate the train and the ability of the first responders to conduct rescue operations within the railcar. The NTSB further concludes that the lack of emergency lighting hampered the ability of passengers to evacuate the train and the ability of the first responders to conduct rescue operations within the railcar.

Following the 1996 train accident between a Maryland Area Regional Commuter train and an Amtrak train near Silver Spring, Maryland, that resulted in the deaths of 11 people, the NTSB

issued recommendation R-97-17 to the FRA regarding emergency lighting on passenger trains (NTSB 1997):

> Require all passenger railcars to contain reliable emergency lighting fixtures that are each self-contained independent power source and incorporate the requirements into the minimum passenger railcar safety standard. (R-97-17)

In 1999, the FRA issued regulations that required emergency lighting for new passenger railcars. The FRA regulations stated that minimum levels of emergency lighting must be provided adjacent to doors intended for emergency egress and along aisles and passageways for new equipment. However, the Talgo trainset was manufactured prior to the implementation of this standard.

As discussed in section 1.13.9, the FRA amended the requirement for emergency lighting requirements for passenger railcars in 49 *CFR* 238.115, "Emergency Lighting," in November 2013. The amended rule required that equipment ordered before September 8, 2000, have batteries in each railcar for emergency lighting should they be disconnected from the power source. The Talgo trainset is required to comply with 49 *CFR* 238.115 (b)(1-2) that states the equipment should comply with APTA standard PR-E-S-013-99, Rev. 1. The rule stipulates that no later than December 31, 2015, at least 70 percent of each railroad's passenger railcars that were ordered prior to September 8, 2000, and placed in service prior to September 9, 2002, comply with the emergency lighting requirements. Amtrak requested and was denied a waiver of compliance by the FRA. As of the publication of this report, the Talgo trainset does not have required emergency lighting installed. Plans have been made for the modification; however, the trains are still without this essential safety feature. The Talgo equipment did not meet the emergency lighting standards outlined in 49 *CFR* Part 238, "Passenger Equipment Safety Standards." The NTSB is concerned with the lack of compliance of this much-needed safety feature on all rail passenger equipment. Information provided in the FRA's denial response to Amtrak's waiver request show that there are more than 1,000 passenger cars of various types that do not meet the current requirements. Therefore, the NTSB recommends to the FRA to use its authority and compel all commuter and passenger railroads to meet the requirements outlined in 49 *CFR* Part 238 without delay, such that in the event of a loss of power, adequate emergency lighting is available to allow passengers, crewmembers, and first responders to see and orient themselves, identify obstacles, safely move throughout the railcar, and evacuate safely.

2.7.2 Exit Controls and Manual Release Mechanism Signage

The loss of power in the railcars and the failure of the system to provide adequate emergency lighting resulted in several passengers being unable to properly operate the exit controls for the railcar doors and delayed their evacuation from the train. The postaccident examination of the railcar revealed that the instructional signs/stickers were present as required by regulation on emergency exit windows, over door exit controls, and manual release mechanisms. However, the instructional signs located over the door exit controls and manual release mechanisms lacked the required HPPL material which would have allowed them to be visible and read by the passengers in the low-light or no-light environment. The passengers' inability to read the signs caused the failure to correctly perform the steps required to operate the doors, thus delaying their evacuation from the train. The NTSB concludes that the instructional signs located above the railcar door exit

controls and manual release mechanisms lacked the required high performance photoluminescent material or suitable alternative that would have allowed them to be visible and read in low-light or no-light environments. Further, the NTSB concludes that the inability of the passengers to see and read the instructional signs regarding the exit controls and manual release mechanisms resulted in the inability of the passengers to use that point of egress for escape and delayed their evacuation from the train.

2.7.3 Compartmentalization

The primary objectives of crashworthiness are to preserve space for occupants to ride out the accident and to limit, to survivable levels, the forces imparted to those occupants. Train seats are placed reasonably close and at a distance to reduce the occupant's amount of fore and aft travel within the railcar during an accident. By limiting how far occupants can travel within the interior and by providing strategic padding, the forces imparted to a train passenger could be survivable. By comparison to highway crashes, the deceleration experienced by a train occupant is generally far less than that experienced by passengers in automobiles.

A paper published by Volpe titled "Reducing the Harm in Rail Crashes: Analysis of Injury Mechanisms and Mitigation Strategies" examined crashworthiness and passenger injuries. Volpe determined that compartmentalization and the application of an energy-absorbing material to the seatbacks in the railcars increased passenger safety. The paper found that many nonfatal injuries were caused by passengers striking the seatbacks with significant force or failing to remain upright in their seats. Maintaining the integrity of the railcar interior, to include the position of the train seats, provides significant occupant protection.

On September 12, 2008, a passenger train and a freight train collided head-on in the Chatsworth district of Los Angeles, California, with each train initially traveling at more than 40 mph (NTSB 2010). Twenty-four passengers and one crewmember were killed on the passenger train, and about 138 train occupants were injured, many severely. The passenger train cars operated by Metrolink did include compartmentalization features that mitigated many potential injuries. Forward-facing row-to-row seats in the Metrolink cars provide a relatively high level of safety. The seats are reasonably close together, with a seat pitch of about 32 inches, which places the front of the occupant about 1.5 feet away from the rear of the adjacent seat back. This seating configuration compartmentalizes the occupants between rows of seats, with minimal distance to travel in free-flight during a collision, which minimizes the secondary impact velocity. The fiberglass seat back is fairly rigid, but injuries experienced by passengers in this configuration are usually not extremely severe because the secondary impact velocity is moderate.

2.7.4 Train Seat Design

In the Talgo passenger railcars, a select number of train seats and seat pairs are designed to rotate. These rotating seats are equipped with a seat-latching mechanism that locks the seat into place to prevent unintentional rotation. Rotation of the seat is normally accomplished by pressing the lock-pedal and pulling on the outboard armrest. The seat is locked into place by pushing sharply toward the wall and allowing the lock-pedal to snap into place.

During the derailment of train 501, several railcars experienced the inadvertent rotation of train seats. This occurred in six of the passenger railcars and resulted in injury to several passengers and restricted the available aisle space for passenger egress. The displacement of the train seats minimized the effectiveness of compartmentalization, which uses the railcar design to provide occupant protection. In railcar AMTK 7423 (9), eight rows of train seats rotated during the derailment. The right side of the coach railcar sustained structural damage from the collision and subsequent penetration of the side of the aluminum railcar by the metal overpass bridge railing. On that side, four rows of seats rotated. Despite only sustaining minimal damage to the left side of the railcar, four rows of seats were also displaced or rotated during the derailment. The displaced seats partially obstructed the aisleway. Railcars AMTK 7420 (12) and AMTK 7422 (10) received only moderate damage to the exterior of the railcars and little or no damage to the interior during the derailment. However, both railcars experienced the rotation of multiple rows of seats. Railcar AMTK 7421 (11), sustained extensive damage in the derailment to include penetrating damage to the right side of the railcar. Several rows of seats rotated at the location where the railcar sidewall was penetrated and pushed inward. Postaccident examination of railcar AMTK 7554 (4) found that three seats were displaced from their original position, including two seats that were not designed to rotate.

A postaccident examination of the train seat latching mechanism was performed. Several of the seat latching mechanisms were examined and found to be operational. However, despite no evidence of mechanical failure, seats in the railcars rotated during the derailment. No definitive evidence could be found to support a finding of mechanical defect or the improper application of the latching mechanism by the train crew. The rotation of the seats caused injuries to seated passengers and decreased the available egress space in the passenger aisleways.

A previous investigation into the rotation of railcar seats and occupant injuries had been conducted by the FRA in 2007 (FRA 2013a). The investigation into the collision between an Amtrak passenger train and a Norfolk Southern freight train revealed that several of the coach railcars experienced rotation of train seats despite the railcars sustaining minimal damage. The investigation found that the rotation of the train seats was likely caused by the collision forces experienced by the railcar during the accident. The seat latching mechanisms were unable to overcome these forces resulting in the rotation of the train seats. The investigation was unable to definitively determine the cause of the rotation of the train seats. There was no evidence that the seat latching mechanism failed or that the seat latches were improperly engaged by the crew. The examination of the railcar seats by the investigators revealed that several of the rotated seats showed signs of impact with the railcar occupants. The investigators were unable to determine whether the rotation of the seats caused the injury to the occupant or whether the unrestrained occupant caused the rotation of the train seat. The NTSB concludes that the rotation of the train seats (1) minimized the effectiveness of compartmentalization by allowing passengers to travel greater distances within the railcar during the accident, (2) caused injury to several passengers, (3) decreased the available aisleway space for passenger egress. Therefore, the NTSB recommends that WSDOT, Amtrak, and ODOT develop and implement a program by which all railcar seats that are designed to rotate be checked for proper positioning and securement in place before the railcar can be placed into or returned to passenger carrying service.

The securement of passenger train seats against inadvertent rotation has been a recognized safety issue since 1990, when the NTSB investigated an Amtrak train derailment in Batavia, Iowa

(NTSB 1991). On January 14, 1992, the NTSB issued Safety Recommendation R-91-71 to Amtrak urging the railroad to implement procedures for on-board personnel to periodically check passenger seats, while enroute, for unlocked anti-rotational devices and take action to ensure the seats are functional. The recommendation was classified "Closed—Acceptable Action" on May 22, 1992, after Amtrak provided a copy of newly issued instructions to on-board personnel and transportation crews to check for unlocked anti-rotational devices and to ensure seats are functional. The NTSB also issued Safety Recommendation R-91-72 to inspect all Trison seat locks to ensure that all are functional which was classified "Closed—Acceptable Action" on June 10, 1993, after Amtrak reported that it had completed a one-time inspection of all Trison seat locks.

The NTSB's investigation of the August 5, 1997, derailment of Amtrak train 4 near Kingman, Arizona, found multiple seat assemblies with their rotational locking mechanisms not engaged, and as a result, several passengers sustained injury (NTSB 1998). On September 16, 1998, the NTSB issued Safety Recommendation R-98-56 to the FRA and Safety Recommendation R-98-61 to Amtrak to install a positive seat securement system to prevent disengagement and undesired rotation in all new passenger cars purchased after January 1, 2000, and to incorporate the system into existing passenger cars when they are scheduled for overhaul. In October 1996, the FRA released a report titled, "Crashworthiness Testing of Amtrak's Traditional Coach Seat: Safety of High-Speed Ground Transportation Systems," which discussed research conducted by Volpe, on behalf of FRA (FRA 1996). According to this report, the seat securement systems were tested and determined to be sufficiently strong to withstand the occupant loads. On July 19, 2012, based on information provided by Amtrak in response to Safety Recommendation R-98-61 and the completed Volpe study, the NTSB classified Safety Recommendation R-98-56 "Closed--Acceptable Alternative Action." In response to Safety Recommendation R-98-61, on June 23, 2000, Amtrak said that it reviewed the merits of this recommendation and determined that Amtrak's existing positive seat securement system was adequate to prevent undesired rotation. At that time, Amtrak said that it continued to concentrate its efforts with standard procedures to ensure that all seat assemblies are secure, and that Amtrak had redundant checks in place prior to departure and enroute. Coach cleaners, mechanics, and all staff members that turn seats as part of their duties should make sure that all seats are returned to their proper position and in the "locked" position. Employees inspecting a train just prior to departure are required to check and ensure all seat assemblies are secured. Additionally, all crewmembers have the responsibility to periodically inspect seats during operations. Based on Amtrak's alternative measures to prevent undesired seat rotations, on December 5, 2000, the NTSB classified Safety Recommendation R-98-61 "Closed--Acceptable Alternate Action."

Although the NTSB believed that the procedures that Amtrak implemented to ensure that antirotational locking mechanisms on seats were being routinely checked, and that Volpe's study found that the locking mechanism was sufficiently strong to withstand occupant loads, the results of this accident again found that seats were not adequately secured against rotation during a derailment accident sequence, and that the seat rotations contributed to the injuries sustained and impeded passengers from escaping the railcar after the accident. The NTSB was unable to determine if the procedures that Amtrak developed in response to Safety Recommendation R-91-71, and which were the basis for closing Safety Recommendations R-98-61 and R-98-56 to the FRA, were being used in the train involved in this accident. The NTSB concludes that existing procedures and design standards for antirotational seat locking mechanisms do not adequately protect passengers in accidents. Therefore, based on the findings of this accident, the NTSB

recommends that the FRA reevaluate existing seat securement mechanisms and their susceptibility to inadvertent rotation, to identify a means to prevent the failure of these devices to maintain seat securement.

2.7.5 Passenger Ejection and Injuries

During the derailment, AMTK 7424 (8) became separated from the attached railcars in the front and to the rear. AMTK 7424 (8) left the track and flipped end over end, overturning and sliding down the grassy embankment adjacent to I-5. The railcar entered the roadway, striking several vehicles before sliding to a stop. During the derailment and subsequent collisions with the bridge and roadway vehicles, the structural integrity of the railcar was compromised and several of the railcar windows were lost. Five passengers were ejected through the window openings and onto the interstate. All five passengers sustained injury resulting from the ejection.

Title 49 *CFR* 238.215(b) addresses the rollover strength of passenger railcar roofs. The requirements for the design of passenger railcars include their ability to maintain structural integrity and resist structural collapse into the occupant space during a rollover event. The regulation does not address railcar deformation or buckling that could adversely affect the structural support for the railcar windows. In this accident, AMTK 7424 (8) was exposed to secondary collision and crush forces that exceeded its design specifications and failed to retain passengers within the railcar. The deformation of the railcar structure during the accident sequence permitted the loss of the railcar windows. The loss of these railcar windows provided the openings through which passengers were ejected.

AMTK 7421 (11) separated from its lead railcar and after derailing came to final rest hanging from the trailing railcar off the bridge overpass. Because of the previous separation, an opening was created at the front of the railcar in the vestibule area. One passenger was partially ejected from the railcar when she was thrown through the opening during the derailment. The partially ejected passenger received injuries during the ejection. Therefore, the NTSB concludes that the failure of the articulated connections defeated the compartmentalization feature of AMTK 7421 (11) and provided a pathway for passenger ejection. The NTSB further concludes that when the articulated connections failed, it resulted in a secondary collision that caused railcar AMTK 7424 (8) to roll over onto its roof and collapse its structure which dislodged the windows and allowed passengers to be ejected.

An unoccupied child car seat was thrown out of the railcar through the same opening as the partially ejected passenger. The seats in the railcar were not equipped with seatbelts and did not possess securement points or straps for the child car seat. Because of the inability to secure the child car seat, it was placed on top of one of the tables in the railcar. The table was located at the end of the railcar, adjacent to the vestibule where the opening was created when the articulated connections failed.

The FRA-sponsored research into occupant protection for passenger railcars and developed standards based on testing of anthropomorphic dummies ranging from a 5th percentile female (height 5 feet, weight 110 pounds) to the 95th percentile male (height 6 feet 1 inch, weight 222 pounds). Additional dynamic accident simulations were performed utilizing anthropomorphic dummies that ranged from the 50th percentile male (height 5 feet 7 inches, weight 172 pounds) to

the 95th percentile male (FRA 2002) (FRA 2003). The tests did not account for smaller passengers, such as children or small-statured adults. Thus, smaller passengers, especially children, may not be afforded the same level of protection as adults, due to their size and their inability to control their displacement during an accident. Though significant research has been conducted regarding occupant protection for children in highway vehicles, less research has been conducted on occupant protection through compartmentalization in aviation and rail transportation. The NTSB concludes that limited research has been conducted into the effectiveness of compartmentalization in passenger railcars for individuals that fall outside of the testing standard range, such as small children. Therefore, the NTSB recommends the FRA conduct research into the effectiveness of occupant protection through compartmentalization for passengers whose size (including children) is not within the current range of anthropomorphic passenger sizes in FRA standards.

In today's society, there is a public expectation of a certain level of safety when using car seats when traveling. Small children in unrestrained car seats may experience unexpected or uncontrolled movement when traveling by train due to sudden or unexpected decelerations which could result in an injury or worse. Although there was not an injury associated with the child's seat ejecting from AMTK 7421, the outcome represented a likely tragic event. The unrestrained car seat was ejected from the railcar at its rear door during the derailment after the articulated railcar-to-railcar connection failed. The NTSB supports the use of child safety seats and is concerned that the inability to anchor a child safety seat lessens its safety. The NTSB concludes that the inability to secure child safety seats in a passenger train results in an undue risk to children due to uncontrolled or unexpected movements during a derailment or collision.

Amtrak's current policy allows the use of a full-size seat, if available, for small children under the age of 2. If no full-size seat is available, they must be carried on the lap of a paying adult. There are currently no features on Amtrak passenger trains that would allow small children in car seats to be restrained. In this accident, the parents who brought their child in a car seat reported that they were unaware that the train would not have securement straps necessary to belt the car seat into one of the seats in the railcar. Subsequently, the car seat containing the child was placed on top of a table during the journey. Although the child was removed from the car seat shortly before the time of the accident, during the derailment, the unrestrained car seat was ejected out of AMTK 7421 (11). The NTSB believes that the parent's expectation that suitable restraints for securing the child seat would be available in the railcar is representative of what many parents traveling with small children may believe. The NTSB concludes that Amtrak should develop a policy for safely accommodating parents traveling with small children restrained in child safety seats. Therefore, the NTSB recommends that Amtrak develop policies for the safe use of child safety seats to prevent uncontrolled or unexpected movements in passenger trains and provide customers with guidance for securing these child safety seats.

The NTSB has been concerned about passengers being ejected through window openings for more than 40 years. In 1972, the NTSB noted that window ejections accounted for a large portion of passenger fatalities (NTSB 1972). Because of this, the NTSB made the following recommendation to the FRA:

> In establishing near-future safety standards for railroad and rail rapid-transit passenger railcars, give priority to the problem of ejection of passengers through large side windows. Regulations should be promulgated on realistic performance

> tests. This source of fatalities, even though small in number, is of such a large proportion among passenger fatalities as to warrant action prior to the issuance of the Mechanical Standards. (R-72-32)

The FRA had introduced improved safety measures for passenger railcars between 1972 and 1985. The NTSB recognized these improvements and on July 29, 1985, Safety Recommendation R-72-32 was classified "Closed—Acceptable Action." However, since 1985 the NTSB has investigated several accidents that still have window issues. Window separations occurred in the December 1, 2013, accident of a Metro-North passenger train near Bronx, New York (NTSB 2014). That train, which derailed at 82 mph, consisted of seven passenger railcars and a locomotive. Four passengers were killed, and 57 passengers and 4 crewmembers were injured. In that case, the NTSB found that a contributing factor to the severity of the accident was the loss of windows that resulted in the fatal ejection of four passengers from the train. As a result of that accident, the NTSB issued the following recommendation to the FRA on December 2, 2014:

> Develop a performance standard to ensure that windows (e.g., glazing, gaskets, and any retention hardware) are retained in the window opening structure during an accident and incorporate the standard into 49 *Code of Federal Regulations* (*CFR)* 238.221 and 49 *CFR* 238.421 to require that passenger railcars meet this standard. (R-14-74)

On March 25, 2015, the FRA responded that it was developing a research program to test all safety aspects of window systems, including window retention and passenger containment during potential accident scenarios, as well as emergency egress, rescue access, and impact resistance requirements. The FRA also said that it needed to obtain more information before determining a research approach on this issue due to the competing expectations for railcar window performance. The FRA expected this research to provide performance data on window retention and passenger containment, evaluate existing and potential designs for window systems, and investigate practical testing metrics and methodologies to assess and quantify containment capabilities. Once this research was complete, the FRA planned to assess the influence of design methodologies that enhance containment capabilities while preserving the ability of window systems to provide required emergency egress and rescue access without compromising other safety purposes. When the research program was completed, the FRA would determine proposed regulatory changes that are reasonable and practical.

On May 12, 2015, less than 2 years after the Metro-North derailment, Amtrak train 188 derailed near Philadelphia, Pennsylvania (NTSB 2016). Four passengers were ejected and killed. The NTSB accident report discussed the FRA's current passenger equipment safety regulations, which did not require protection from lateral forces caused by derailments and overturns. The injuries in the Amtrak train 188 accident illustrated the need for railcar safety design standards to address such forces. The NTSB's report about the Amtrak train 188 accident concluded that, although the passenger equipment safety standards in 49 *CFR* Part 238 provide some level of protection for occupants, the current requirements did not ensure that occupants are protected in some types of accidents, and that railroad occupant safety research and regulations should better reflect the different types of accidents that were occurring and employ a systematic approach that considers the causes of injury during derailments in which occupants may be thrown or struck by

loose objects. As a result, the NTSB issued two recommendations to the FRA addressing improvements needed to the FRA's occupant protection standards:

> Conduct research to evaluate the causes of passenger injuries in passenger railcar derailments and overturns and evaluate potential methods for mitigating those injuries, such as installing seat belts in railcars and securing potential projectiles. (R-16-35)
>
> When the research specified in Safety Recommendation R-16-35 identifies safety improvements, use the findings to develop occupant protection standards for passenger railcars that will mitigate passenger injuries likely to occur during derailments and overturns. (R-16-36)

The FRA responded to these recommendations on August 23, 2017, indicating that through its Rail Safety Advisory Committee (RSAC) Passenger Safety Working Group, it had continually supported numerous research activities evaluating the causes of passenger injuries in various train derailment and collision scenarios. The FRA said that its effort supported new industry standards and federal regulation where necessary, including a notice of proposed rulemaking (NPRM) updating and supplementing its passenger equipment safety standards. The FRA went on to discuss its belief that, unlike accidents in the automobile and air transportation modes, adding seat belts in passenger railcars was not an effective way to increase safety because the purpose of seat belts was to allow occupants to survive the deceleration of the volume within which they are contained. According to the FRA, passenger rail coaches experience a peak deceleration of one-fourth that of automobiles during a collision and, therefore, the interior of a typical passenger railcar provides a level of protection to passengers, without the need for seat belts, at least as effective as the protection provided to automobile and air transport passengers.

The FRA also wrote in its August 23, 2017, letter, that it had extensively evaluated the effectiveness and practicality of available occupant protections such as seat belts, and it concluded that focusing efforts on passenger containment and interior attachment integrity, and ensuring that passengers survive secondary impacts, were the most effective methods of preventing and mitigating passenger injuries. The FRA indicated that it would continue to support and perform research to evaluate the causes of passenger injuries in train derailments and collisions as specific issues arise, but it did not plan to initiate a separate new research program.

The NTSB does not agree with the FRA that its current research program and regulations effectively address protecting passengers in railcars involved in derailments and overturns. In the span of 4 years, the NTSB has investigated three major railroad accidents involving passenger railcar derailments that resulted in significant lateral acceleration, for which containment did not adequately protect the 11 passengers killed after being ejected from the railcars. In addition, containment did not fully protect the over 300 passengers hospitalized in these accidents. The NTSB concludes that this accident shows the need for the FRA to take action on Safety Recommendations R-16-35 and -36, which addressed the FRA's occupant protection standards. Therefore, the NTSB reiterates Safety Recommendations R-16-35 and -36 to the FRA, which are reclassified "Open—Unacceptable Response."

2.7.6 Communications

The emergency response to the derailment involved multiple agencies from three different jurisdictions. The jurisdictions include JBLM and Pierce and Thurston Counties. The train derailment occurred within Pierce County. JBLM has concurrent jurisdiction with Pierce County in DuPont, Washington. The base's Emergency Communications Operation is controlled by the DOD and operates on a different radio frequency than the other emergency agencies within Pierce County. JBLM's communications system is also not compatible with the emergency communication system used by Thurston County, the adjacent jurisdiction to the south. The lack of interoperability between the various communication operations resulted in confusion by the emergency responders on the scene regarding command and the inability to effectively coordinate the rescue efforts among the various responding agencies and jurisdictions.

Because of the inability of the various fire and rescue agencies to communicate with one another over a common radio frequency, the command officers for each jurisdiction had to conduct operations face-to-face. The various command officials were required to sit together in the same automobile to establish a unified command. This was an inefficient method of conducting a large operation such as a mass casualty incident. The lack of effective communications resulted in established protocols not being followed which led to the failure to properly account for personnel on the scene, the dispatch of additional resources from a neighboring jurisdiction that was a greater distance away despite appropriate units being available that were closer to the scene and within the same county. Several members of the fire department characterized their own rescue efforts as "freelancing" resulting from the lack of an identified command structure. Multiple hospitals were "stood up" or alerted due to confusion created by the lack of communication and coordination between the various agencies, jurisdictions, and JBLM, who was ultimately in command of the incident.

The various law enforcement agencies that participated in the operation had established a separate command post that could not coordinate its efforts with the fire department because the agencies could not communicate directly with one another. Attempts to combine the two separate command posts into one unified command post were unsuccessful. The NTSB concludes that since there was no common incident command radio channel between fire and rescue agencies, law enforcement, and emergency management, the emergency response lacked efficient coordination.

2.7.7 Postaccident Activity

The lack of interoperability between JBLM's communications system and that of the other responding agencies was known prior to the derailment. JBLM's director of emergency services had been working with the DOD to improve his agency's ability to communicate with surrounding jurisdictions but the project had not been completed at the time of the accident. The NTSB concludes that the lack of interoperability of the emergency communications system used by JBLM resulted in poor communications that adversely affected the coordinated rescue effort. Following the accident, JBLM purchased the necessary radios that will allow communication with local emergency response agencies. JBLM also coordinated with adjacent jurisdictions to establish regional interoperability channels for a multiagency response. When completed, JBLM will have interoperability with all emergency responders in the region.

The NTSB realizes that there are other military facilities that coordinate emergency services with local civilian agencies. The NTSB concludes that incompatible radio frequencies or similar communication issues may exist at other locations where military and civilian agencies coordinate their emergency response. Therefore, the NTSB recommends the DOD Fire and Emergency Services Working Group: (1) Identify all military installations that provide emergency services to areas outside of their installations, make them aware of this accident, and determine the effectiveness of the communications system between that military installation and the adjacent jurisdictions. (2) Implement a plan to address any deficiencies with interoperability caused by the incompatibility between the DOD communications system and that of adjacent civilian agencies.

3. Conclusions

3.1 Findings

1. None of the following was a factor in this accident: the mechanical readiness of the train, the condition of the track or signal system, the weather, cell phone use, medical conditions of the Amtrak engineer; use of alcohol or other drugs, fatigue, or any impairment or distraction.

2. This accident has demonstrated the value of image and audio data for the accident investigation and development of safety recommendations.

3. The Federal Railroad Administration has demonstrated an unwillingness to implement the recommendations and regulation that would require inward-facing video and audio devices that are critical to accident investigations and improving safety on our nation's railroads.

4. Inward-facing recorders with both image and audio capabilities can increase the understanding of the circumstances of an accident, and, ultimately, provide greater precision in safety recommendations and subsequent safety improvements.

5. Had the positive train control system been fully installed and operational at the time of the accident, it would have intervened to stop the train prior to the curve, thus preventing the accident.

6. The Amtrak qualification program for the Point Defiance Bypass did not effectively train and test qualifying crewmembers on the physical characteristics of a new territory.

7. Amtrak did not provide sufficient training on all characteristics of the Charger locomotive.

8. The engineer's unfamiliarity with, and fixation on, the audible and visual alerts associated with the overspeed alarm reduced his vigilance of events outside the locomotive moments before the accident.

9. Engineers could better master the characteristics of a new locomotive with the use of simulators.

10. A systematic approach to training would have aided Amtrak managers in recognizing the challenge of operating new equipment on new territories.

11. Supplemental warning plaques, such as distance ahead plaques, or other types of conspicuous signs strategically positioned after an advance warning speed reduction sign would provide enhanced visibility as an added level of safety for operating crews of passenger and freight trains.

12. Crewmembers qualifying on a territory can and should play an active role in establishing and maintaining safe train operations.

13. Had the Washington State Department of Transportation, Central Puget Sound Regional Transit Authority, Amtrak, and the Federal Railroad Administration been more engaged and assertive, and had clearly defined roles and responsibilities during the preparation of the inaugural service, it would have been more likely that safety hazards, such as the speed reduction for the curve would have been better identified and addressed.

14. The Federal Railroad Administration did not use its authority provided under the Fixing America's Surface Transportation Act to approve speed limit action plans with conditions to require inclusion of planned and under-construction alignments owned or operated by railroads and require periodic updates to railroads' speed limit action plans, which led to no speed limit action plan being developed.

15. The Federal Railroad Administration should have ensured that speed limit action plans include new or updated routes owned or operated by railroads, using its authority in the Fixing America's Surface Transportation Act.

16. Central Puget Sound Regional Transit Authority did not update the timetable on its Lakewood Subdivision to identify the curve at milepost 19.8 as a crew focus zone, which would have helped to mitigate the overspeed derailment risk.

17. Amtrak failed to update the operating documents prior to starting revenue service which would have highlighted the speed reduction at the accident curve.

18. Central Puget Sound Regional Transit Authority's omission of the final activities of the certification process resulted in the failure to control the identified hazardous condition of an overspeed derailment at the accident curve.

19. Central Puget Sound Regional Transit Authority failed to implement effective mitigations in lieu of positive train control to control the hazard at the accident curve.

20. There was no requirement for the Washington State Department of Transportation, Central Puget Sound Regional Transit Authority, or Amtrak to provide additional protection for the accident curve.

21. Because the Federal Railroad Administration did not act on the recommendation to add technology to assist engineers in determining their location, an opportunity to improve safety was overlooked.

22. Washington State Department of Transportation should have provided greater oversight of Central Puget Sound Regional Transit Authority's safety certification process.

23. The Federal Railroad Administration's current requirement to review, but not approve, system safety program plans does not achieve the level of safety oversight expected from the Federal Railroad Administration.

24. Without positive train control and the lack of oversight to implement mitigations, there was an increased safety risk to the traveling public.

25. Amtrak did not take an active enough role in reviewing safety aspects during the preparation of the Point Defiance Bypass to ensure a safe operation.

26. Amtrak failed to assess, evaluate, and act upon readily identifiable safety hazards to ensure the safety of the Point Defiance Bypass for the traveling public and its own train crews.

27. Amtrak needs to implement a safety management system on all of its operations whether internal, host railroad, or in states that own infrastructure over which Amtrak operates.

28. The repeated postponement of Title 49 *Code of Federal Regulations* Part 270, System Safety Program, has delayed needed safety improvements for the passenger rail industry, rail employees, and the traveling public.

29. The use of risk assessments to identify, mitigate, and control risk on new and upgraded service will increase the level of safety to Amtrak operations over all territories.

30. The Talgo Series VI passenger railcar AMTK 7424 (8) did not provide adequate occupant protection after its articulated connections separated, resulting in complex uncontrolled movements and secondary collisions with the surrounding environment which led to damage so severe to the railcar body structure, that it caused passenger ejections.

31. The failure of the articulated connections of both Talgo Series VI passenger railcars AMTK 7422 (10) and AMTK 7504 (7), the detached rolling assembly from AMTK 7422 (10) and its secondary collision with AMTK 7504 (7) directly resulted in three fatalities and two partially ejected passengers who had been traveling in AMTK 7504 (7).

32. The safety straps used for the Talgo Series VI trainset rolling assembly retention modifications were degraded due to their use in exposed outdoor conditions and were used far past their service life.

33. During the grandfathering approval process, the Federal Railroad Administration failed to consider the limited useful service life of the polyester straps used for the Talgo Series VI trainset rolling assembly retention modifications which had degraded and failed to improve the crashworthiness of the train.

34. The Talgo Series VI trainset is structurally vulnerable if it is involved in a high-energy derailment or collision due to its lack of crashworthiness protections and is at risk to severe and catastrophic loss of survivable space.

35. The Talgo Series VI trainset designated as Amtrak train 501 was not in compliance with the terms and conditions of the Federal Railroad Administration's grandfathering agreement.

36. Allowing the grandfathering provision to remain in Title 49 *Code of Federal Regulations* 238.203(d), "Grandfathering of noncompliant equipment for use on a specified rail line or lines," is an unnecessary risk that is not in the public interest nor consistent with railroad safety.

37. The Talgo Series VI trainset does not meet current United States safety standards and poses unnecessary risk to railroad passenger safety when involved in a derailment or collision.

38. The lead locomotive's crashworthiness design and crash energy management features minimized the severity for injuries and fatalities to the train crew by performing as intended in this accident.

39. After the Talgo trainset separated from the power cars, there was no power to the train for emergency lighting which hampered the ability of passengers to evacuate the train and the ability of the first responders to conduct rescue operations within the railcar.

40. The lack of emergency lighting hampered the ability of passengers to evacuate the train and the ability of the first responders to conduct rescue operations within the railcar.

41. The instructional signs located above the railcar door exit controls and manual release mechanisms lacked the required high performance photoluminescent material or suitable alternative that would have allowed them to be visible and read in low-light or no-light environments.

42. The inability of the passengers to see and read the instructional signs regarding the exit controls and manual release mechanisms resulted in the inability of the passengers to use that point of egress for escape and delayed their evacuation from the train.

43. The rotation of the train seats (1) minimized the effectiveness of compartmentalization by allowing passengers to travel greater distances within the railcar during the accident, (2) caused injury to several passengers, (3) decreased the available aisleway space for passenger egress.

44. Existing procedures and design standards for antirotational seat locking mechanisms do not adequately protect passengers in accidents.

45. The failure of the articulated connections defeated the compartmentalization feature of AMTK 7421 (11) and provided a pathway for passenger ejection.

46. When the articulated connections failed, it resulted in a secondary collision that caused railcar AMTK 7424 (8) to roll over onto its roof and collapse its structure which dislodged the windows and allowed passengers to be ejected.

47. Limited research has been conducted into the effectiveness of compartmentalization in passenger railcars for individuals that fall outside of the testing standard range, such as small children.

48. The inability to secure child safety seats in a passenger train results in an undue risk to children due to uncontrolled or unexpected movements during a derailment or collision.

49. Amtrak should develop a policy for safely accommodating parents traveling with small children restrained in child safety seats.

50. This accident shows the need for the Federal Railroad Administration to take action on Safety Recommendations R-16-35 and -36, which addressed the Federal Railroad Administration's occupant protection standards.

51. Since there was no common incident command radio channel between fire and rescue agencies, law enforcement, and emergency management, the emergency response lacked efficient coordination.

52. The lack of interoperability of the emergency communications system used by Joint Base Lewis-McCord resulted in poor communications that adversely affected the coordinated rescue effort.

53. Incompatible radio frequencies or similar communication issues may exist at other locations where military and civilian agencies coordinate their emergency response.

3.2 Probable Cause

The National Transportation Safety Board determines that the probable cause of the Amtrak 501 derailment was Central Puget Sound Regional Transit Authority's failure to provide an effective mitigation for the hazardous curve without positive train control in place, which allowed the Amtrak engineer to enter the 30-mph curve at too high of a speed due to his inadequate training on the territory and inadequate training on the newer equipment. Contributing to the accident was the Washington State Department of Transportation's decision to start revenue service without being assured that safety certification and verification had been completed to the level determined in the preliminary hazard assessment. Contributing to the severity of the accident was the Federal Railroad Administration's decision to permit railcars that did not meet regulatory strength requirements to be used in revenue passenger service, resulting in (1) the loss of survivable space and (2) the failed articulated railcar-to-railcar connections that enabled secondary collisions with the surrounding environment causing severe damage to railcar-body structures which then failed to provide occupant protection resulting in passenger ejections, injuries, and fatalities.

4. Recommendations

4.1 New Recommendations

As a result of this investigation, the National Transportation Safety Board makes the following recommendations:

To the Secretary of Transportation:

Require the Federal Railroad Administration to issue regulations for inward-facing recorders that include image and audio recordings as recommended by the National Transportation Safety Board in R-10-01 and R-10-02. (R-19-007)

To the Federal Railroad Administration:

Study the efficacy of how signs used in other modes of transportation may be effectively used in the railroad industry. (R-19-008)

Require railroads to periodically review and update their speed limit action plans to reflect any operational or territorial operating changes requiring additional safety mitigations and to continually monitor the effectiveness of their speed limit action plan mitigations. (R-19-009)

Require railroads to apply their existing speed limit action plan criteria for overspeed risk mitigation to all current and future projects in the planning, design, and construction phases, including projects where operations are provided under contract. (R-19-010)

Prohibit the operation of passenger trains on new, refurbished, or updated territories unless positive train control is implemented. (R-19-011)

Remove the grandfathering provision within Title 49 *Code of Federal Regulations* 338.206(d) and require all railcars comply with the applicable current safety standards. (R-19-012)

Use your authority and compel all commuter and passenger railroads to meet the requirements outlined in Title 49 *Code of Federal Regulations* Part 238 without delay, such that in the event of a loss of power, adequate emergency lighting is available to allow passengers, crewmembers, and first responders to see and orient themselves, identify obstacles, safely move throughout the railcar, and evacuate safely. (R-19-013)

Reevaluate existing seat securement mechanisms and their susceptibility to inadvertent rotation, to identify a means to prevent the failure of these devices to maintain seat securement. (R-19-014)

Conduct research into the effectiveness of occupant protection through compartmentalization for passengers whose size (including children) is not within the current range of anthropomorphic passenger sizes in Federal Railroad Administration standards. (R-19-015)

To the United States Department of Defense Fire and Emergency Services Working Group:

(1) Identify all military installations that provide emergency services to areas outside of their installations, make them aware of this accident, and determine the effectiveness of the communications system between that military installation and the adjacent jurisdictions. (2) Implement a plan to address any deficiencies with interoperability caused by the incompatibility between the US Department of Defense communications system and that of adjacent civilian agencies. (R-19-016)

To the Washington State Department of Transportation:

Discontinue the use of the Talgo Series VI trainsets as soon as possible and replace them with passenger railroad equipment that meet all current United States safety requirements. (R-19-017)

To the Washington State Department of Transportation, Amtrak, and the Oregon Department of Transportation:

Develop and implement a program by which all railcar seats that are designed to rotate be checked for proper positioning and securement in place before the railcar can be placed into or returned to passenger carrying service. (R-19-018)

To the National Railroad Passenger Corporation (Amtrak):

Ensure operating crewmembers demonstrate their proficiency on the physical characteristics of a territory by using all resources available to them, including: in-cab instruments, signage, signals, and landmarks; under daylight and nighttime conditions; and during observation rides, throttle time, and written examinations. (R-19-019)

Revise your classroom and road training program to ensure that operating crews fully understand all locomotive operating characteristics, alarms, and the appropriate response to abnormal conditions. (R-19-020)

Require that all engineers undergo simulator training before operating new or unfamiliar equipment (at a minimum, experience and respond properly to all alarms), and when possible, undergo simulator training before operating in revenue service in a new territory and experience normal and abnormal conditions on that territory. (R-19-021)

Implement a formal, systematic approach to developing training and qualification programs to identify the most effective strategies for preparing crewmembers to safely operate new equipment on new territories. (R-19-022)

Work with host railroads and states that own infrastructure over which you operate to conduct a comprehensive assessment of the territories to ensure that necessary wayside signs and plaques are identified, highly conspicuous, and strategically located to provide operating crews the information needed to safely operate their trains. (R-19-023)

Conduct training that specifies and reinforces how each crewmember, including those who have not received their certifications or qualifications, may be used as a resource to assist in establishing and maintaining safe train operations. (R-19-024)

Update your safety review process to ensure that all operating documents are up to date and accurate before initiating new or revised revenue operations. (R-19-025)

Incorporate all prerevenue service planning, construction, and route verification work into the scope of your corporate-wide system safety plan, including your rules and policies, risk assessment analyses, safety assurances, and safety promotions. (R-19-026)

Work collaboratively with all host railroads and states that own infrastructure over which you operate in an effort to develop a comprehensive safety management system program that meets or exceeds the pending Federal Railroad Administration regulation, Title 49 *Code of Federal Regulations* Part 270, "System Safety Program." (R-19-027)

Conduct risk assessments on all new or upgraded services that occur on Amtrak-owned territory, host railroads, or in states that own infrastructure over which you operate. (R-19-028)

Develop policies for the safe use of child safety seats to prevent uncontrolled or unexpected movements in passenger trains and provide customers with guidance for securing these child safety seats. (R-19-029)

To Central Puget Sound Regional Transit Authority:

Immediately conduct a review of all operating documents and ensure that safety mitigations are applied with uniformity throughout the entirety of your territory. (R-19-030)

In areas of your territory where you are a host of a tenant railroad, coordinate with all current and any prospective tenants on the development of operating documents including timetables, general orders, and special instructions. (R-19-031)

Review your internal process for safety certification and verification, perform a gap analysis, and develop an action plan to address the deficiencies identified in the gap analysis and detailed in this report to enhance the verification activities on projects. (R-19-032)

4.2 Reiterated Recommendations

As a result of this investigation, the National Transportation Safety Board reiterates the following previously issued recommendations:

To the Federal Railroad Administration:

1. Enact Title 49 *Code of Federal Regulations* Part 270, "System Safety Program," without further delay. (R-17-17)

2. Require railroads to install devices and develop procedures that will help crewmembers identify their current location and display their upcoming route in territories where positive train control will not be implemented. (R-16-32)

3. Conduct research to evaluate the causes of passenger injuries in passenger railcar derailments and overturns and evaluate potential methods for mitigating those injuries, such as installing seat belts in railcars and securing potential projectiles. (R-16-35)

4. When the research specified in Safety Recommendation R-16-35 identifies safety improvements, use the findings to develop occupant protection standards for passenger railcars that will mitigate passenger injuries likely to occur during derailments and overturns. (R-16-36)

4.3 Classified Recommendations

To the Federal Railroad Administration:

1. Require railroads to install devices and develop procedures that will help crewmembers identify their current location and display their upcoming route in territories where positive train control will not be implemented (R-16-32)

   Safety Recommendation R-16-32 is classified *Open—Unacceptable Response.*

2. Conduct research to evaluate the causes of passenger injuries in passenger railcar derailments and overturns and evaluate potential methods for mitigating those injuries, such as installing seat belts in railcars and securing potential projectiles. (R-16-35)

   Safety Recommendation R-16-35 is classified *Open—Unacceptable Response.*

3. When the research specified in Safety Recommendation R-16-35 identifies safety improvements, use the findings to develop occupant protection standards for passenger railcars that will mitigate passenger injuries likely to occur during derailments and overturns. (R-16-36)

   Safety Recommendation R-16-36 is classified *Open—Unacceptable Response.*

BY THE NATIONAL TRANSPORTATION SAFETY BOARD

ROBERT L. SUMWALT, III
Chairman

EARL F. WEENER
Member

BRUCE LANDSBERG
Vice Chairman

JENNIFER HOMENDY
Member

Report Date: May 21, 2019

Board Member Statements

Vice Chairman Bruce Landsberg filed the following concurring statement on June 3, 2019.

I concur with the report and its findings, probable cause, and recommendations, and I would like to add some additional comments.

There was a Titanic-like complacency and certainty exhibited by those tasked with the safety, operation and management of the Point Defiance Bypass rail line before the revenue service started in 2017. Like the Titanic, the crash happened on the very first passenger run. The term "accident" is inappropriate because that implies that this was an unforeseen and unpredictable event. It was anything but unforeseeable. The NTSB has been investigating overspeed derailments around curves for decades. Likewise, NTSB has made recommendations to the Federal Railroad Administration (FRA) and to the railroads to implement Positive Train Control (PTC) for decades.

The NTSB, like all accident investigation organizations, operates with the benefit of hindsight. It's always easier to judge after the fact. I myself have engaged in Monday Morning Quarterbacking on occasion. But to continue the football metaphor, when a team keeps losing games for the same reasons and the coaches and players are not studying the game tapes, it's time for some soul searching.

The engineer's failure was the final link in a very long chain of mismanagement events. The root cause was extremely lax safety oversight, unclear responsibility, and poor training. Railroad management and safety implementation were lacking at almost every level. Member Homendy noted that safety was the FRA's primary function, not economics or political expediency. According to FRA's own website:

> The Federal Railroad Administration's (FRA) mission is to enable the safe, reliable, and efficient movement of people and goods for a strong America, now and in the future. FRA executes this mission through development and enforcement of safety regulations, investment in passenger and freight rail services and infrastructure, and research into and development of innovations and technology solutions.

There was plenty of financial oversight but not enough attention on safety and operational aspects. As Chairman Sumwalt noted, AMTRAK is now operating under new management since the crash and appears to be moving in a much more positive safety direction. They understand that the training provided to the train crews was insufficient. Crew Resource Management cannot work when there are two new-to-the-route crew members and the operator is unfamiliar with the locomotive.

Multiple agencies were involved but somehow missed critical factors. By Sound Transit's own Safety and Security Management Plan (SSMP), *the curve was deemed an unacceptable safety risk without implementation of PTC*. Yet apparently, senior management signed off with no mitigations in place. Who's accountable?

The use of timetables, a procedure employed by traincrews dating well back into the last century, was thought to be sufficient. NTSB has seen that methodology fail consistently in

previous accidents. Why continue to rely on a system that requires such a high level of human performance?

Railroad signaling and signage works if everyone performs their jobs correctly – otherwise it fails periodically. NTSB has and is making recommendations to encourage the rail community to adopt far more conspicuous signage, as is used in other transportation modes to attract crew attention. Readily available technology to enhance situational awareness currently exists. The science of conspicuity and alerting in human factors is well known. It's time to adopt it.

NTSB Recommendation R-16-32 to FRA was issued in 2016 after a previous curve overspeed crash: "Require railroads to install devices and develop procedures that will help crewmembers identify their current location and display their upcoming route in territories where PTC will not be implemented."

The FRA and many of its constituent railroads assert that the technology does not currently exist and has little to no known safety benefit to offset its significant cost. They believe that a regulation requiring railroads to install such technology would be redundant with existing rules.

NTSB has kept this recommendation open and categorized the response as "unacceptable." My hope is that FRA and the railroads just misunderstood the recommendation, and I must assume that none of their management or staff have any familiarity with map applications on smart phones and tablets. Moving maps as supplemental equipment on tablets and installed devices have been used for a decade or more in aircraft, boats and other ground transport vehicles. That's how navigation is done today. GPS is provided by the taxpayers to all and a simple dedicated application for rail use would not cost "hundreds of millions of dollars," as stated by FRA.

AMTRAK is currently testing such an app while FRA and other railroads refer to existing regulations that require locomotive engineers and conductors be familiar with the characteristics of the territory in which they will be working. Time to review the game tapes – again.

Would it be perfect? No! Would it meet the standard for current railroad signaling? No! It's intended to be supplemental to all the existing systems that should prevent accidents all the time but quite clearly fail periodically. This is not a replacement or substitute for PTC, but it should improve the situational awareness of crews significantly. Test it!

Finally, it's way past time for Congress to stop granting exemptions and exceptions to a law that was passed in 2008 requiring full implementation of PTC on passenger routes by 2015. It's also way past time for many railroads and their regulatory authorities to take their management and safety oversight responsibility seriously.

Member Jennifer Homendy filed the following concurring statement on May 31, 2019. Chairman Robert L. Sumwalt, III, Vice Chairman Bruce Landsberg, and Member Earl F. Weener joined in this statement.

I concur with the report and its findings, probable cause, and recommendations, and I would like to add some additional comments.

In 2009, the Federal Railroad Administration (FRA) issued its final decision to approve Amtrak's petition to exempt the Talgo VI trainsets from passenger railcar crashworthiness standards. This exemption allowed the trainsets to continue operating on BNSF tracks near Point Defiance and along the southern Puget Sound. At the time, there was tremendous excitement among federal, state, and local entities and Amtrak about new opportunities to develop high-speed rail and upgrade existing routes, as Congress had just provided the largest infusion of capital in passenger rail in decades.

Each of the entities involved with the petition – Amtrak, Sound Transit, the Washington State Department of Transportation, and the FRA – were laser focused on moving forward projects that would reduce travel time, boost ridership, and provide an alternative to increasingly congested highways, but within those discussions safety seemingly became less of a priority. In fact, during a public hearing on the petition, the FRA argued against concerns raised by some commenters about the safety of the trainsets, stating that the FRA's role was not to determine whether the proposed exemption provided "an equivalent level of safety" to the more stringent passenger railcar crashworthiness standards, but to determine whether the exemption was "consistent with railroad safety," as if there are varying levels of safety.

While 49 *Code of Federal Regulations* 238.203 did, in fact, require the FRA to determine whether the petition was in the public interest and consistent with railroad safety, the FRA neglected its core mission, mandated by Congress in the Rail Safety Improvement Act of 2008 (RSIA) (Public Law 110-432, Division A), which states: "In carrying out its duties, the Administration shall consider the assignment and maintenance of safety as its highest priority…".[62]

While the law lays out additional duties, such as developing high-speed rail, it is ***safety*** that is required to be the FRA's highest priority, not the efficient movement of people or goods.

NTSB investigators did a tremendous job of identifying a number of deficiencies in FRA's evaluation and approval of Amtrak's petition for exemption in 2009 on the Puget Sound route. Those deficiencies included FRA's failure to require more comprehensive safety analyses and more stringent risk mitigations, such as positive train control, and its approval of Amtrak's second petition for exemption in 2017, just four days before the accident, to allow operations on the Point Defiance Bypass, with no safety documentation whatsoever.[63]

[62] 49 *United States Code* 103.

[63] 49 *Code of Federal Regulations* 238.203(h)(2) authorizes the FRA to attach special conditions to the approval of petitions for exemption to passenger railcar crashworthiness standards. Analyses by Arthur D. Little, a contractor for

I could continue at length about each of these but there is one issue the team raised that should be highlighted: lack of a safety management system (SMS) program at Amtrak. The NTSB has long recommended the implementation of SMS across all modes of transportation. Although not required (it should be), SMS is becoming a standard of practice among Part 121 (commercial aviation) operators. There are four components to SMS per Federal Aviation Administration Order:

- a safety policy that sets out what the organization is trying to achieve; outlines the requirements, methods, and processes the organization will use to achieve the desired safety outcomes; establishes senior leadership's commitment to incorporate and continually improve safety in all aspects of the business; and reflects management's commitment to implementing processes and procedures for establishing and meeting safety objectives and promoting a safety culture

- a safety risk management process that identifies all hazards, analyzes the risk, assesses the risk, controls the risk, and then continually evaluates whether those risk management strategies are working

- a safety assurance process that evaluates the continued effectiveness of, and compliance with, requirements and implemented risk control strategies and supports the identification of new hazards

- a safety promotion program which includes training, communication, and other actions to create a positive safety culture within all levels of the workforce

I believe that had Amtrak developed and implemented a comprehensive SMS, this accident would likely never have occurred.

This accident is not the first time we have raised the importance of Amtrak implementing SMS. In 2016, an Amtrak train traveling near Chester, Pennsylvania, struck a backhoe with a worker inside, killing the operator and a track supervisor and injuring 39 others. In our report, we recommended that Amtrak develop a comprehensive SMS that vitalizes safety goals and programs with executive management accountability; incorporates risk management controls for all operations affecting employees, contractors, and the traveling public; improves continually through safety data monitoring and feedback; and is promoted at all levels of the company. We issued a near identical recommendation in this report, and we reiterated our recommendation that FRA implement its "System Safety Program" rulemaking, without further delay.

The "System Safety Program" rulemaking was issued in response to section 103 of RSIA, which required the Secretary of Transportation to promulgate a regulation that requires each Class I railroad and railroad carriers that provide intercity rail passenger or commuter rail passenger transportation to develop and implement a railroad safety risk reduction program that

Amtrak, evaluated the benefits of PTC, which showed that implementation of PTC along the Pacific Northwest Corridor would reduce the risk of fatalities by 47 percent and the risk of injury by 30 percent.

systematically evaluates railroad safety risks on its system and manages those risks in order to reduce the numbers and rates of railroad accidents, incidents, injuries, and fatalities.

RSIA was enacted in 2008; the FRA issued its final rule to address section 103 in 2016, but the Department of Transportation has delayed its implementation six times. The final rule is now set to go into effect in September 2019. I hope that the FRA holds to this new date, but if it does not, the railroads, including Amtrak, cannot and should not wait on the FRA to take action. It is each railroad's responsibility to ensure the safety of their employees and their riders in all aspects of their business operations.

Appendixes

Appendix A. Investigation

The National Transportation Safety Board (NTSB) was notified on December 18, 2017, of the accident in which a Cascades Service Amtrak passenger train had derailed onto Interstate 5. Initially, there were an unknown number of fatalities, but a confirmation of multiple passengers injured. The NTSB launched Board Member Bella Dinh-Zarr, who was the on-scene spokesperson, and a team to investigate track, signals and train control, railroad operations, mechanical, crashworthiness, survival factors, event/data/video recorders, human performance, medical issues, and an investigator-in-charge.

The NTSB Transportation Disaster Assistance Division was also on scene to provide assistance with victims and victims' families.

The parties to the investigation include Federal Railroad Administration, Washington Utilities and Transportation Commission, Amtrak, Central Puget Sound Regional Transit Authority, Washington State Department of Transportation, Talgo, Inc., Siemens Industry, Inc. the Brotherhood of Locomotive Engineers and Trainmen; and the International Association of Sheet Metal, Air, Rail and Transportation Workers.

On July 10-11, 2018, the NTSB held an investigative hearing, *National Railroad Passenger Corporation (Amtrak) Operations on Host Railroads and Safety Management Systems-involved Accidents (DuPont, Washington, December 18, 2017, and Cayce, South Carolina, February 4, 2018*.

Appendix B. DuPont Railroad of Record

Attached is a flowchart explaining the railroad of record for each component of the DuPont accident.

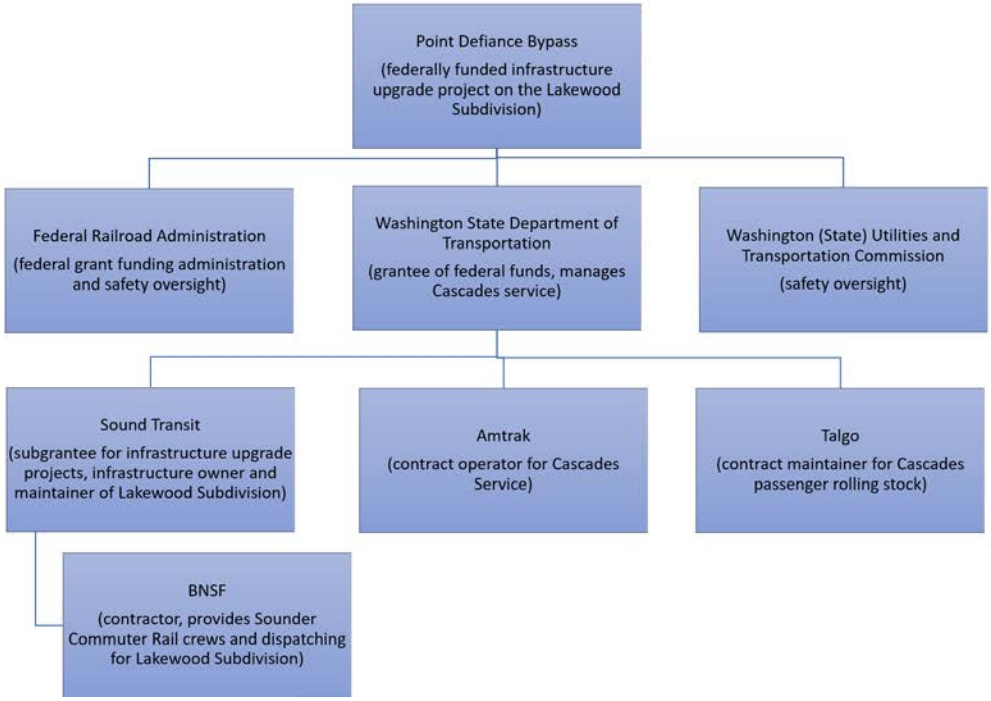

Figure 42. Railroad of record.

References

Adelsohn, Luis. 2019. *CRM Aviation Human Factors & Safety*. (http://crm4pilot.blogspot.com/p/blog-page_7.html?_sm_au_=iVVpjL8t1jQZrZMQ). Accessed May 10, 2019.

FAA (Federal Aviation Administration). 2019. *CAMI Drug Information Web Site*. (http://jag.cami.jccbi.gov/toxicology), accessed May 3, 2019.

FHWA (Federal Highway Administration). 2009. *Manual on Uniform Traffic Control Devises*, 2009 edition, incorporating Revisions 1 and 2, May 2012. (Washington, DC: US Department of Transportation, FHWA).

FR (*Federal Register*). 2018. Vol. 83, no. 225 (November 21).

----. 2016. Vol. 81, no. 234 (December 6).

FRA (Federal Railroad Administration). 2013. *Using cognitive task analysis to inform issues in human systems in railroad operations*. DOT/FRA/ORD-13/31. (Washington, DC: US Department of Transportation, FRA.)

----. 2013a. *Collision of Amtrak Passenger Train and Norfolk Southern Freight Train—November 30, 2007, Chicago, Illinois*. DOT/FRA/ORD-13/45. (Washington, DC: US Department of Transportation, FRA.)

----. 2003. *Commuter Rail Seat Testing and Analysis of Facing Seats*. DOT/FRA/ORD-03/06. (Washington, DC: US Department of Transportation, FRA.)

----. 2002. *Commuter Rail Seat Testing and Analysis*. DOT/FRA/ORD-01/06. (Washington, DC: US Department of Transportation, FRA.)

----. 1996. *Crashworthiness Testing of Amtrak's Traditional Coach Seat*. DOT/FRA/ORD-96/08. (Washington, DC: US Department of Transportation, FRA.)

NTSB (National Transportation Safety Board). 2018. *Southeastern Pennsylvania Transportation Authority Trolley Collision, Philadelphia, Pennsylvania, January 4, 2017*. RAB-18/06. (Washington, DC: NTSB).

----. 2018a. *Southwestern Railroad Collision, Roswell, New Mexico, April 28, 2015*. RAB-18/04. (Washington, DC: NTSB).

----. 2018b. *Head-on Collision Between Amtrak Passenger Train and CSX Freight Train RRD18MR003*. RRD18MR003-Prelim. (Washington, DC: NTSB).

----. 2017. *Amtrak Train Collision with Maintenance-of-Way Equipment, Chester, Pennsylvania, April 3, 2016*. RAR-17/02. (Washington, DC: NTSB).

----. 2017a. *National Passenger Railroad Corporation Passenger Train 55 Collision with Rocks and Subsequent Derailment on the New England Central Railroad, Northfield, Vermont, October 5, 2015*. RAB-17/03. (Washington, DC: NTSB).

----. 2017b. *Amtrak Train Derailment on BNSF Railway Tracks, Cimarron, Kansas, March 13, 2016*. RAB-17/11. (Washington, DC: NTSB).

----. 2016. *Derailment of Amtrak Passenger Train 188, Philadelphia, Pennsylvania, May 12, 2015*. RAR-16/02. (Washington, DC: NTSB).

----. 2014. *Organizational Factors in Metro-North Railroad Accidents*. SIR-14/04. (Washington, DC: NTSB).

----. 2010. *Collision of Metrolink Train 111 with Union Pacific Train LOF65-12, Chatsworth, California, September 12, 2008*. RAR-10/01. (Washington, DC: NTSB).

----. 1998. *Derailment of Amtrak Train 4, Southwest Chief, on the Burlington Northern Santa Fe Railway, Kingman, Arizona, August 9, 1997*. RAR-98/03. (Washington, DC: NTSB).

----. 1997. *Collision and Derailment of Maryland Rail Commuter MARC Train 286 and National Railroad Passenger Corporation AMTRAK Train 29, Silver Spring, Maryland, February 16, 1996*. RAR-97/02. (Washington, DC: NTSB).

----. 1991. *Derailment of Amtrak Train No. 6 on the Burlington Northern Railroad, Batavia, Iowa, April 23, 1990*. RAR-91/03. (Washington, DC: NTSB).

----. 1972. *Derailment of Amtrak Train No. 1 While Operating on the Illinois Central Railroad, Salem, Illinois, June 10, 1971*. RAR-72/05. (Washington, DC: NTSB).

PCEMS (Pierce County, Washington). 2019. "Emergency Medical Services." (https://www.co.pierce.wa.us/930/Emergency-Medical-Services-EMS), accessed May 2, 2019.

Rosenhand, H., Roth, E., and Multer, J. 2012. "Cognitive and Collaborative Demands of Freight Conductor Activities Results and Implications of a Cognitive Task Analysis." (Washington, DC: US Department of Transportation, Federal Railroad Administration).

Tyrell, D. 2001. "U.S. Rail Equipment Crashworthiness Standards." Presentation at What Can We Realistically Expect From Crashworthiness? Rail Equipment Crashworthiness Symposium, Institute of Mechanical Engineers, May 2, 2001, London, England.

Wogalter, M.S. and Laughery, K.R. "WARNING! Sign and Label Effectiveness." *Current Directions in Psychological Science*, Vol. 5, no. 2. (April 1996). Newbury Park, California: SAGE Publishing.

Wilson, Bruce and Tyrell, David. 2016. "Reducing the Harm in Rail Crashes: Analysis of Injury Mechanisms and Mitigation Strategies." JRC2016-5811. Presentation to the ASME IEEE

ASCE 2016 Joint Rail Conference, ASMEJRC2016, April 12-15, 2016, Columbia, South Carolina.